PRELIMINARY/FINAL MAJOR SITE PLAN

FOR

PRESTIGE COMMERCE CENTER

BLOCK 4.46, LOTS 1.04, 1.07

BLOCK 4.461, LOT 1.07

TOWNSHIP OF NORTH BRUNSWICK

MIDDLESEX COUNTY, NEW JERSEY

PROPERTY OWNERS WITHIN 200 FT.

BLOCK	LOT	Property Location	Owner Name	Mailing Address	City, State	Zip
4.64	1	ALBURY WAY	GOVERNOR'S POINTE I CONDO ASSN	WIMBELDON COURT	NORTH BRUNSWICK NJ	99999
4.64	1.4514	455 NORTHAM DRIVE	PATEL CHANDRAKANT & JYOTI	455 NORTHAM DRIVE	NORTH BRUNSWICK NJ	08902
4.64	1.4515	456 NORTHAM DRIVE	NARULA SHYNA & PURI YUGESH	84 ANDREWS WAY	PISCATAWAY NJ	08854
4.64	1.4516	457 NORTHAM DRIVE	JAYABALAN KATHIRSAN	457 NORTHAM DRIVE	NORTH BRUNSWICK NJ	08902
4.64	1.4524	463 NORTHAM DRIVE	VISKOVIC ROSE MARIE	463 NORTHAM DRIVE	NORTH BRUNSWICK NJ	08902
4.64	1.4525	464 NORTHAM DRIVE	LEINING MARK E	464 NORTHAM DRIVE	NORTH BRUNSWICK NJ	08902
4.64	1.4526	465 NORTHAM DRIVE	PATEL REMA	10 RHODA TERRACE	PARSIPPANY NJ	07054
4.64	1.4527	466 NORTHAM DRIVE	SADMADANI HARESH	466 NORTHAM DRIVE	NORTH BRUNSWICK NJ	08902
4.64	1.4534	471 NORTHAM DRIVE	SCESNEY ASHLEY M	471 NORTHAM DRIVE	NORTH BRUNSWICK NJ	08902
4.64	1.4535	472 NORTHAM DRIVE	SHAH KRUTARTHA & ANUPALI	472 NORTHAM DRIVE	NORTH BRUNSWICK NJ	08902
4.64	1.4536	473 NORTHAM DRIVE	SATRASALA SHALINI & MUTYALA RANGANA	22 INVERNESS COURT	MONROE NJ	08831
4.64	1.4537	474 NORTHAM DRIVE	PATEL DEEPIKABAHEN & PATEL TRUSHAR	474 NORTHAM DRIVE	NORTH BRUNSWICK NJ	08902
4.64	2	CLAY STREET	GOVERNOR'S POINTE II CONDO ASSN	45 CLAY STREET	NORTH BRUNSWICK NJ	99999
4.64	2.4611	1 KINGSTON RUN	BASTOGI SIRISH & SEEMA	22 PARKSIDE DRIVE	NORTH BRUNSWICK NJ	08902
4.64	2.4612	2 KINGSTON RUN	KARMA INC	34 TANNER DRIVE	PRINCETON NJ	08540
4.64	2.4613	3 KINGSTON RUN	SONI MAHENDRA & HARSHIDA	3 KINGSTON RUN	NORTH BRUNSWICK NJ	08902
4.64	2.4614	4 KINGSTON RUN	PORTER CHANDRA T	4 KINGSTON RUN	NORTH BRUNSWICK NJ	08902
4.64	2.4615	13 KINGSTON RUN	TUTEJA VINOD & VEENA	13 KINGSTON RUN	NORTH BRUNSWICK NJ	08902
4.64	2.4616	14 KINGSTON RUN	PATEL PURVIN	14 KINGSTON RUN	NORTH BRUNSWICK NJ	08902
4.64	2.4621	5 KINGSTON RUN	GARNER ERNESTINE	5 KINGSTON RUN	NORTH BRUNSWICK NJ	08902
4.64	2.4622	6 KINGSTON RUN	MILORD KETTLY	6 KINGSTON RUN	NORTH BRUNSWICK NJ	08902
4.64	2.4623	7 KINGSTON RUN	LEARY TABITHA	7 KINGSTON RUN	NORTH BRUNSWICK NJ	08902
4.64	2.4624	8 KINGSTON RUN	ROMANELLA MARISSA	8 KINGSTON RUN	NORTH BRUNSWICK NJ	08902
4.64	2.4631	9 KINGSTON RUN	SALA PRASAD & VEMULA VARUDHINI	20B0 1 WHITE OAKLAKE 6302	CUMMING GA	30041
4.64	2.4632	10 KINGSTON RUN	MOY BRYAN T & ERIC	6 CARRINGTON COURT	MATAWAN NJ	07747
4.64	2.4633	11 KINGSTON RUN	SHAIKH FAIZ & KULSUM	11 KINGSTON RUN	NORTH BRUNSWICK NJ	08902
4.64	2.4634	12 KINGSTON RUN	SENGAL DIVYA	403 WILLOWBROOK DRIVE	NORTH BRUNSWICK NJ	08902
4.64	2.4715	13 CLAY STREET	PITTMAN SHARONDA	13 CLAY STEET	NORTH BRUNSWICK NJ	08902
4.64	2.4716	14 CLAY STREET	SALLA SANDHYA & RAYENI ABHISHEK N	14 CLAY STREET	NORTH BRUNSWICK NJ	08902
4.64	2.4717	15 CLAY STREET	DOUGHERTY KENNETH F	15 CLAY STREET	NORTH BRUNSWICK NJ	08902
4.64	2.4718	16 CLAY STREET	GANESH SIVAJI	50 CAMPUS DRIVE	EDISON NJ	08837
4.64	2.4725	17 CLAY STREET	PATEL PURVIN	9 GOODWIN DRIVE	NORTH BRUNSWICK NJ	08902
4.64	2.4726	18 CLAY STREET	PITTMAN NADIA	18 CLAY STREET	NORTH BRUNSWICK NJ	08902
4.64	2.4727	19 CLAY STREET	LANE CARLA L	19 CLAY STREET	NORTH BRUNSWICK NJ	08902
4.64	2.4728	20 CLAY STREET	20 CLAY STREET LLC	5556 ORCHARD STREET	PISCATAWAY NJ	08854
4.64	2.4735	21 CLAY STREET	SHAH TRUPTI	21 CLAY STREET	NORTH BRUNSWICK NJ	08902
4.64	2.4736	22 CLAY STREET	HALL CARA LYNN	22 CLAY STREET	NORTH BRUNSWICK NJ	08902
4.64	2.4737	23 CLAY STREET	ST ROSE ENTREPENEURS LLC	119 PRINCESS DRIVE	NORTH BRUNSWICK NJ	08902
4.64	2.4738	24 CLAY STREET	LEE JAE BEOM & JANG YOUN HEE	24 CLAY STREET	NORTH BRUNSWICK NJ	08902
4.65	2	201-226 NORTH CENTER DR	NORTH BRUNSWICK COMMERCE CENTER LLC	902 CARNEGIE CRT STE 400	PRINCETON NJ	08540
4.65	3	2245 ROUTE 1	COMM CTR NB LLC %HILTON MANAGEMENT	902 CARNEGIE CRT STE 400	PRINCETON NJ	08540
4.66	1.04	2421-2451 ROUTE 1	COMM CTR NB LLC %HILTON MANAGEMENT	902 CARNEGIE CRT STE 400	PRINCETON NJ	08540
4.66	1.05	CAMBRIDGE DRIVE	HART 50 CONSD ASSN % NOMESTEAD MGT	856 ROUTE 206 S-BLDG C	HILLSBOROUGH NJ	08844
4.66	1.0701	2416 CANTERBURY LANE	GANAPATHI RAMU & ARUNACHALAM S	2416 CANTERBURY LANE	NORTH BRUNSWICK NJ	08902
4.66	1.0901	2368 BERKSHIRE LANE	BENJAMIN CALEB M & WENDY TREVELINE-	2468 BERKSHIRE LANE	NORTH BRUNSWICK NJ	08902
4.66	1.0902	2370 BERKSHIRE LANE	MUSLIU CAROL M	2370 BERKSHIRE LANE	NORTH BRUNSWICK NJ	08902
4.66	1.0903	2372 BERKSHIRE LANE	SAMUDRALA RAJESH & VANI	2372 BERKSHIRE LANE	NORTH BRUNSWICK NJ	08902
4.66	1.0904	2374 BERKSHIRE LANE	DELINIS JOSEPH & MICHELLE,ANUSHA	2374 BERKSHIRE LANE	NORTH BRUNSWICK NJ	08902
4.66	1.0905	2376 BERKSHIRE LANE	UPADHYAY PRAMOD K & MEDHA ANSHU	2376 BERKSHIRE LANE	NORTH BRUNSWICK NJ	08902
4.66	1.0906	2378 BERKSHIRE LANE	SHARMA PARESH & SARNA ROHINI	2378 BERKSHIRE LANE	NORTH BRUNSWICK NJ	08902
4.66	1.0907	2380 BERKSHIRE LANE	MISHRA RAJESH & ASHA	2380 BERKSHIRE LANE	NORTH BRUNSWICK NJ	08902
4.66	1.1101	2352 BERKSHIRE LANE	POTHURAJU SRINIVASA & MANORAMA	2352 BERKSHIRE LANE	NORTH BRUNSWICK NJ	08902
4.66	1.1102	2354 BERKSHIRE LANE	YALAMANCHILLI V R V &VELLVELLI L S	2354 BERKSHIRE LANE	NORTH BRUNSWICK NJ	08902
4.66	1.1103	2356 BERKSHIRE LANE	MANCHIKALAPUDI LAXMI P & PRASANNA	2356 BERKSHIRE LANE	NORTH BRUNSWICK NJ	08902
4.66	1.1104	2358 BERKSHIRE LANE	THOMAS LAMAR W	2358 BERKSHIRE LANE	NORTH BRUNSWICK NJ	08902
4.66	1.1105	2360 BERKSHIRE LANE	SUVARCHALA&DESISH B &SRIPURAPU M P	2360 BERKSHIRE LANE	NORTH BRUNSWICK NJ	08902
4.66	1.1106	2362 BERKSHIRE LANE	SUNDARAM DINESH B & MURALITHARAN S	2362 BERKSHIRE LANE	NORTH BRUNSWICK NJ	08902
4.66	1.1107	2364 BERKSHIRE LANE	ADVANI GULSHAN & KANCHAN	2364 BERKSHIRE LANE	NORTH BRUNSWICK NJ	08902
4.66	1.1301	2336 BERKSHIRE LANE	DASOJU RAJA S & VANDANA	2336 BERKSHIRE LANE	NORTH BRUNSWICK NJ	08902
4.66	1.1302	2338 BERKSHIRE LANE	PATEL MITTUL J & CHAITALI M	2338 BERKSHIRE LANE	NORTH BRUNSWICK NJ	08902
4.66	1.1303	2340 BERKSHIRE LANE	RACHABATTULA MADHU B & KALYANI	2340 BERKSHIRE LANE	NORTH BRUNSWICK NJ	08902
4.66	1.1304	2342 BERKSHIRE LANE	SUNBKARA PRAVEENA & MADHU S	2342 BERKSHIRE LANE	NORTH BRUNSWICK NJ	08902
4.66	1.1305	2344 BERKSHIRE LANE	TATA PAVAN KUMAR & DEEPTHI	2344 BERKSHIRE LANE	NORTH BRUNSWICK NJ	08902
4.66	1.1306	2346 BERKSHIRE LANE	PATEL ADITI & PATEL TEJAL	2346 BERKSHIRE LANE	NORTH BRUNSWICK NJ	08902
4.66	1.1307	2348 BERKSHIRE LANE	SINGH MANPREET & JOSSON SANDEEP K	2348 BERKSHIRE LANE	NORTH BRUNSWICK NJ	08902
4.66	1.1407	2315 BERKSHIRE LANE	OU SHICHAO & FANG U	2315 BERKSHIRE LANE	NORTH BRUNSWICK NJ	08902
4.66	1.1501	2316 BERKSHIRE LANE	BOLLU SURESH & RATNA MADHURI	2316 BERKSHIRE LANE	NORTH BRUNSWICK NJ	08902
4.66	1.1502	2318 BERKSHIRE LANE	YASIN NAZNEEN & KALYANI ZAMIR	2318 BERKSHIRE LANE	NORTH BRUNSWICK NJ	08902
4.66	1.1503	2320 BERKSHIRE LANE	SHI ZHENG & LI NINGWEI	2320 BERKSHIRE LANE	NORTH BRUNSWICK NJ	08902
4.66	1.1504	2322 BERKSHIRE LANE	VAID SOMA	2322 BERKSHIRE LANE	NORTH BRUNSWICK NJ	08902
4.66	1.1505	2324 BERKSHIRE LANE	PHILIP PRASHANT & PALVANCHA SREELAZ	2324 BERKSHIRE LANE	NORTH BRUNSWICK NJ	08902
4.66	1.1506	2326 BERKSHIRE LANE	AHUJA NIKHIL &AHUJA TRILOK &AHUJA S	2326 BERKSHIRE LANE	NORTH BRUNSWICK NJ	08902
4.66	1.1507	2328 BERKSHIRE LANE	ARS COMAKSHI	2328 BERKSHIRE LANE	NORTH BRUNSWICK NJ	08902
4.66	1.1601	302 CAMBRIDGE DRIVE	CHANA JAYANTH KUMAR &LAGUDU LAVANYA	302 CAMBRIDGE DRIVE	NORTH BRUNSWICK NJ	08902
4.66	1.1602	304 CAMBRIDGE DRIVE	PATEL FALSHRUTI & PATEL DEVANSHI	304 CAMBRIDGE DRIVE	NORTH BRUNSWICK NJ	08902
4.66	1.1603	306 CAMBRIDGE DRIVE	KALATHI, REGHURAJ VAKIL & SALINI K	306 CAMBRIDGE DRIVE	NORTH BRUNSWICK NJ	08902
4.66	1.1604	308 CAMBRIDGE DRIVE	GHATE KUNAL & SHIDORE NITHA	308 CAMBRIDGE DRIVE	NORTH BRUNSWICK NJ	08902
4.66	1.1605	310 CAMBRIDGE DRIVE	VARUGHESE JOBY K & SERENA P	310 CAMBRIDGE DRIVE	NORTH BRUNSWICK NJ	08902
4.66	1.1606	312 CAMBRIDGE DRIVE	MCNULTY JESSICA	312 CAMBRIDGE DRIVE	NORTH BRUNSWICK NJ	08902
4.66	1.1607	314 CAMBRIDGE DRIVE	RAMAYANAPU ANURAG & SHAHID HINNA	314 CAMBRIDGE DRIVE	NORTH BRUNSWICK NJ	08902
4.661	1.06	2313 ROUTE 1	COMM CTR NB LLC %HILTON MANAGEMENT	902 CARNEGIE CRT STE 400	PRINCETON NJ	08540
4.461	1.07	ROUTE 1	COMM CTR NB LLC %HILTON MANAGEMENT	902 CARNEGIE CRT STE 400	PRINCETON NJ	08540
141	2	SOUTH DRIVE	NORTH BRUNSWICK TOD ASSOCIATES LLC	820 MORRIS TURNPIKE	SHORT HILLS NJ	07078
141	41	GRAND AVENUE	NORTH BRUNSWICK TOD ASSOCIATES LLC	820 MORRIS TURNPIKE	SHORT HILLS NJ	07078
141	42	GRAND AVENUE	NORTH BRUNSWICK TOD ASSOCIATES LLC	820 MORRIS TURNPIKE	SHORT HILLS NJ	07078
141	43	GRAND AVENUE	NORTH BRUNSWICK TOD ASSOCIATES LLC	820 MORRIS TURNPIKE	SHORT HILLS NJ	07078

THE FOLLOWING OTHER AGENCIES MUST ALSO BE NOTIFIED :

Middlesex County Planning Board
County Administration Building
5th Floor
75 Bayard Street
New Brunswick, NJ 08901

North Brunswick Township
710 Hermann Road
North Brunswick, NJ 08902
Attn: Township Clerk

Public Service Electric & Gas Co.
Manager – Corporate Properties
80 Park Place, T6B
Newark, NJ 07102

Verizon
N.J Gen. Tax Administration
Broad Street – Room 305
Newark, NJ 07101

Cablevision of Raritan Valley
275 Centennial Avenue
CN 6805
Piscataway, NJ 08855-6805
Attn: Margarite Pensdeville

Department of Transportation
State of New Jersey
1035 Parkway
Trenton, NJ 08625

Construction Department Mr. Tim Allen
Texas Eastern Transmission Corp.
501 Coolidge Street
South Plainfield, NJ 07080

Sunoco Pipeline L.P.
Right of Way
Montello Complex
525 Fritztown Road
Sinking Spring, PA 19608

INDEX OF SHEETS

SHT. No.	DESCRIPTION	LATEST REVISION
1	COVER SHEET	
2	DEMOLITION PLAN	
3	DIMENSION PLAN	
4	GRADING PLAN	
5	UTILITY PLAN	
6	SOIL EROSION & SEDIMENT CONTROL PLAN	
7 - 8	SOIL EROSION & SEDIMENT CONTROL DETAILS	
9	LANDSCAPE PLAN	
10	LANDSCAPE DETAILS	
11	LIGHTING PLAN	
12 - 14	CONSTRUCTION DETAILS	

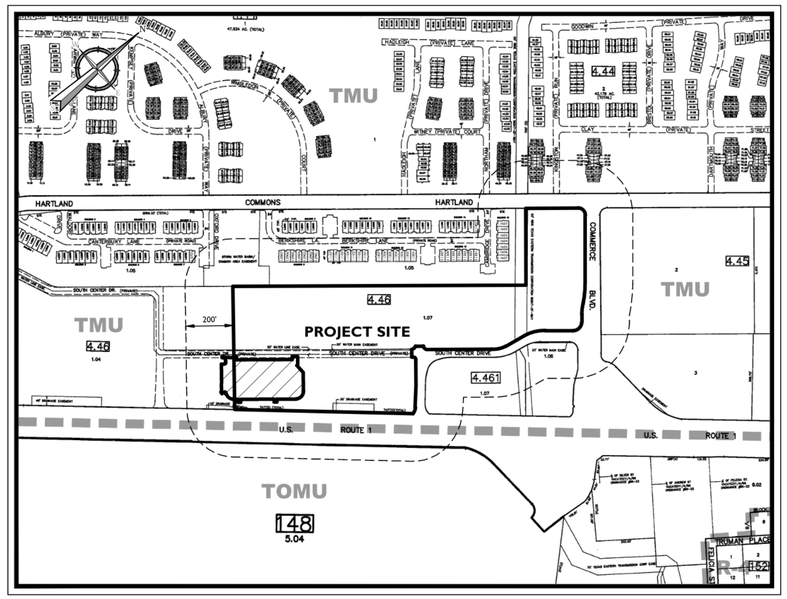

TOWNSHIP OF NORTH BRUNSWICK
R-4 SINGLE FAMILY RESIDENTIAL
TMU TRANSITIONAL MIXED USE
TOMU TRANSIT-ORIENTED MIXED USE

KEY & ZONING MAP

ZONE BOUNDARY

SOURCE: REAL QUEST

300 0 300

SCALE : 1" = 300'

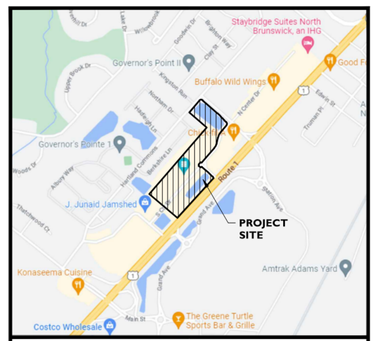

LOCATION MAP

SOURCE: GOOGLE EARTH

SCALE: 1" = 1,000'

I HEREBY CERTIFY THAT I AM THE OWNER OF RECORD OF THE SITE HEREIN DEPICTED AND THAT I CONCUR WITH THE SUBMISSION.

OWNER DATE

APPROVED BY THE PLANNING BOARD OF THE TOWNSHIP OF NORTH BRUNSWICK AT THE REGULAR MEETING OF _____.
DATE

CHAIRMAN DATE

SECRETARY DATE

ENGINEER DATE

GENERAL INFORMATION

THE SUBJECT PROPERTY IS KNOWN AS LOT(S) 1.07 IN BLOCK(S) 4.46 AS SHOWN ON SHEET(S) 19 OF THE OFFICIAL TAX MAP OF THE TOWNSHIP OF NORTH BRUNSWICK, MIDDLESEX COUNTY, NEW JERSEY, DATED JUNE, 1998.

1. THE PROPERTY IS LOCATED IN THE TRANSITIONAL MIXED USE DISTRICT ZONE DISTRICT AND CONTAINS A TOTAL TRACT AREA OF 647,205 SF, 14.9 ACRES.

   OWNER/ APPLICANT: PRESTIGE PROPERTIES & DEVELOPMENT CO., INC.
   546 FIFTH AVENUE, 15TH FLOOR
   NEW YORK, NEW YORK 10036

3. THE SUBJECT PROPERTY IS PRESENTLY AN OVERFLOW PARKING LOT ASSOCIATED WITH THE REGAL MOVIE THEATRE. THE APPLICANT PROPOSES TO CONSTRUCT A FREDDY'S QUICK SERVICE RESTAURANT AND AN OFFICE/RETAIL/RESTAURANT BUILDING.

4. ZONE DATA: TRANSITIONAL MIXED USE DISTRICT (TMU)

	REQUIRED	EXISTING	PROPOSED
MINIMUM LOT AREA	2 AC	14.9 AC	14.9 AC
MINIMUM LOT WIDTH	150 FT*	248.4 FT	248.4 FT
MINIMUM LOT DEPTH	100 FT*	269 FT	269 FT
PRINCIPAL BUILDING			
MINIMUM FRONT YARD	100 FT	N/A	100 FT
MINIMUM REAR YARD	35 FT OR 35% OF TOTAL LOT DEPTH (187 FT)*	N/A	356+/- FT
MINIMUM SIDE YARD	10 FT	N/A	1.5 FT (V)
TOTAL TWO SIDE YARDS	20 FT	N/A	504+/- FT
MAXIMUM BUILDING HEIGHT (STORIES)	3*	N/A	1
MAXIMUM BUILDING HEIGHT	40 FT*	N/A	<40 FT
MAXIMUM PRINCIPAL BUILDING COVERAGE	40 %*	12 %	13.3 %
MAXIMUM IMPERVIOUS COVERAGE	80 %*	70 %	60.9 %
PARKING			
(PAD C) RETAIL/OFFICE USE: 1 SPACE / 200 SF OF GFA	3,000/200 = 15 SPACES	952	857
(PAD C)RESTAURANT USE: 1 SPACE / 100 SF OF GFA	2,404/100 =25 SPACES		
FREDDY'S: 1 SPACE / 100 SF OF GFA	2,799/100 =28 SPACES		
REGAL (EXISTING): 0.2 SPACE / SEAT + EMPLOYEES	467		
BJ's (EXISTING): 1 SPACE / 250 SF	161,785/250 = 648 SPACES	524	524
CHICK-FIL-A (EXISTING): 1 SPACE / 100 SF	5,500/100 = 55 SPACES	77	77
VACANT RESTAURANT (EXISTING): 1 SPACE / 100 SF	6,044/100 = 61 SPACES		
TOTAL PARKING (ON SITE)	**1,299**	**1,553**	**1,440****
SIZE	9 X 18	9 X 18	9 X 18
PARKING SETBACK (STREETLINE)	10 FT	50.3 FT	57.2 FT
LOADING: 1 SPACE/5,000 SF	1*	N/A	0 (V)
EV CHARGING STATIONS	1	N/A	2
ADA SPACES (PAD B & C):	3	N/A	4
SIGNAGE			
FREDDY'S RESTAURANT			
MINIMUM SIGN SETBACK	20 FT	2.5 FT (V)	
MAXIMUM PROJECTION	12 IN	< 12 IN	
MAXIMUM FACADE SIGN HEIGHT	<HEIGHT OF BUILDING	COMPLIES	
MAXIMUM NUMBER OF FACADE SIGNS	NOT SPECIFIED	5	
MAXIMUM FACADE SIGN AREA (ALL SIDES)	NOT SPECIFIED	248.8 SF	
PAD C			
MINIMUM SIGN SETBACK	20 FT	100.3 FT	
MAXIMUM PROJECTION	12 IN	< 12 IN	
MAXIMUM FACADE SIGN HEIGHT	<HEIGHT OF BUILDING	COMPLIES	
MAXIMUM NUMBER OF FACADE SIGNS	NOT SPECIFIED	4	
MAXIMUM FACADE SIGN AREA (ALL SIDES) (COMMERCIAL/OFFICE USE)	10% OF FACADE AREA 6430/100 = 643 SF	134 SF	

(E) = PRE-EXISTING NON-CONFORMING CONDITION
(V) = VARIANCE REQUIRED

* NON-RESIDENTIAL USES WITHIN 500 FT OR U.S. ROUTE 1 SHALL COMPLY WITH THE DEVELOPMENT STANDARDS AND THE SCHEDULE OF AREA, YARD AND BUILDING REQUIREMENTS APPLICABLE TO THE C-2 GENERAL COMMERCIAL DISTRICT.
** TWO (2) ELECTRIC VEHICLE (EV) UNITS ARE PROPOSED, WHICH COUNT AS TWO (2) PARKING SPACES PER CODE

5. BOUNDARY SURVEY & TOPOGRAPHIC INFORMATION SHOWN HEREON IS TAKEN FROM A PLAN ENTITLED "BOUNDARY AND TOPOGRAPHIC SURVEY FOR PRESTIGE PROPERTIES AND DEVELOPMENT CO., INC.", SHEET 1 OF 1, DATED 3/13/2023, PREPARED BY JOHN J. PANKOK, N.J. C.O.A. #24GA27986500 OF COLLIERS ENGINEERING & DESIGN.

6. THE HORIZONTAL DATUM IS RELATIVE TO THE NEW JERSEY STATE PLANE COORDINATE SYSTEM AND ADJUSTED TO NAD1983. THE VERTICAL DATUM IS RELATIVE TO NAVD 1988.

7. BENCHMARK REFERENCE: REFERENCE, ELEVATION: ELEVATION FEET NGVD 1929 OR NAVD 1988.

8. NO FRESHWATER WETLANDS ARE KNOWN TO EXIST ON THE SITE PER NJ-GEOWEB.

9. NO 100 YEAR FLOOD PLAINS ARE KNOWN TO EXIST ON THE SITE PER THE FLOOD INSURANCE RATE MAP (FIRM 34023C0109F) FOR THE TOWNSHIP OF NORTH BRUNSWICK, COUNTY OF MIDDLESEX, NEW JERSEY, DATED 7/6/2010 PREPARED BY THE FEDERAL EMERGENCY MANAGEMENT AGENCY.

10. THIS SET OF PLANS IS NOT DEPICTING ENVIRONMENTAL CONDITIONS OR A CERTIFICATION/WARRANTY REGARDING THE PRESENCE OR ABSENCE OF ENVIRONMENTALLY IMPACTED SITE CONDITIONS. MASER CONSULTING HAS PERFORMED NO EXPLORATORY OR TESTING SERVICES, INTERPRETATIONS, CONCLUSIONS OR OTHER SITE ENVIRONMENTAL SERVICES RELATED TO THE DETERMINATION OF THE POTENTIAL FOR CHEMICAL, TOXIC, RADIOACTIVE OR OTHER TYPE OF CONTAMINANTS AFFECTING THE PROPERTY AND THE UNDERSIGNED PROFESSIONAL IS NOT QUALIFIED TO DETERMINE THE EXISTENCE OF SAME. SHOULD ENVIRONMENTAL CONTAMINATION OR WASTE BE DISCOVERED, THE OWNER AND CONTRACTOR SHALL BE RESPONSIBLE FOR COMPLYING WITH ALL APPLICABLE LAWS AND REGULATIONS.

11. THIS IS A SITE DEVELOPMENT PLAN AND UNLESS SPECIFICALLY NOTED ELSEWHERE HEREON, IS NOT A SURVEY.

12. DO NOT SCALE DRAWINGS AS THEY PERTAIN TO ADJACENT AND SURROUNDING PHYSICAL CONDITIONS, BUILDINGS, STRUCTURES, ETC. THEY ARE SCHEMATIC ONLY, EXCEPT WHERE DIMENSIONS ARE SHOWN THERETO.

13. THIS SET OF PLANS HAS BEEN PREPARED FOR THE PURPOSES OF MUNICIPAL AND AGENCY REVIEW AND APPROVAL. THIS SET OF PLANS SHALL NOT BE UTILIZED AS CONSTRUCTION DOCUMENTS UNTIL ALL APPROVALS REQUIRED HAVE BEEN OBTAINED, ALL CONDITIONS OF APPROVAL HAVE BEEN SATISFIED AND THE DRAWINGS HAVE BEEN STAMPED "ISSUED FOR CONSTRUCTION". THIS SHALL INCLUDE APPROVAL OF ALL CATALOG CUTS, SHOP DRAWINGS AND/OR DESIGN CALCULATIONS AS REQUIRED BY THE PROJECT OWNER AND/OR MUNICIPAL ENGINEER.

14. THE CONTRACTOR IS RESPONSIBLE FOR PROJECT SAFETY, INCLUDING PROVISION OF ALL APPROPRIATE SAFETY DEVICES AND TRAINING REQUIRED.

15. PRIOR TO ANY EXCAVATION, THE CONTRACTOR SHALL CALL 811 TO REQUEST A UTILITY MARKOUT.

SITE NOTES

1. BUILDING FOOTPRINT DIMENSIONS SHOWN HEREON ARE APPROXIMATE. FINAL BUILDING FOOTPRINT DIMENSIONS FOR EACH BUILDING SHALL BE FURNISHED ON THE INDIVIDUAL ARCHITECTURAL PLANS AT THE TIME OF APPLICATION FOR A BUILDING PERMIT. ALL STRUCTURES SHALL CONFORM TO THE APPROVED BULK ZONING REQUIREMENTS.

2. CURB RAMPS ARE TO BE CONSTRUCTED FLUSH WITH THE FINISHED PAVEMENT SURFACE. ACCESSIBLE CURB RAMPS INSTALLED WITHIN THE PUBLIC RIGHT OF WAY ARE TO HAVE DETECTABLE WARNING SURFACES COMPLIANT WITH FEDERAL ACCESSIBILITY GUIDELINES FOR PEDESTRIAN FACILITIES IN THE PUBLIC RIGHT OF WAY.

3. TRAFFIC SIGNAGE AND STRIPING SHALL CORRESPOND TO THE MANUAL ON UNIFORM TRAFFIC CONTROL DEVICES.

4. REFUSE AND RECYCLABLES SHALL BE STORED WITHIN OUTSIDE SCREENED TRASH ENCLOSURES AS NOTED ON THE PLANS, AND PICKED UP BY PRIVATE WASTE DISPOSAL HAULER.

5. THE CONTRACTOR SHALL BE RESPONSIBLE FOR THE PROPER DISPOSAL OF ALL WASTE MATERIALS IN ACCORDANCE WITH GOVERNING REGULATIONS AND AGENCIES.

6. THERE SHALL BE NO ON-SITE BURIAL OF CONSTRUCTION MATERIALS, TREE BRANCHES, STUMPS, OR OTHER DELETERIOUS MATERIALS.

7. MATERIALS, WORKMANSHIP, AND CONSTRUCTION FOR THE SITE IMPROVEMENTS SHOWN HEREON SHALL BE IN ACCORDANCE WITH:

   A. NEW JERSEY DEPARTMENT OF TRANSPORTATION "STANDARD SPECIFICATIONS FOR ROAD AND BRIDGE CONSTRUCTION", 2019, AS SUPPLEMENTED.
   B. CURRENT PREVAILING MUNICIPAL, COUNTY, AND/OR STATE AGENCY SPECIFICATIONS, STANDARDS, CONDITIONS, AND REQUIREMENTS.
   C. CURRENT PREVAILING UTILITY COMPANY/AUTHORITY SPECIFICATIONS, STANDARDS, AND REQUIREMENTS.
   D. CURRENT MANUFACTURER SPECIFICATIONS, STANDARDS, AND REQUIREMENTS.

UTILITY NOTES

1. EXISTING UTILITY INFORMATION SHOWN HEREON HAS BEEN COLLECTED FROM VARIOUS SOURCES AND IS NOT GUARANTEED AS TO ACCURACY OR COMPLETENESS. THE CONTRACTOR SHALL VERIFY ALL INFORMATION TO HIS SATISFACTION PRIOR TO EXCAVATION. WHERE EXISTING UTILITIES ARE TO BE CROSSED BY PROPOSED CONSTRUCTIONS, TEST PITS SHALL BE DUG BY THE CONTRACTOR PRIOR TO CONSTRUCTION TO ASCERTAIN EXISTING INVERTS, MATERIALS, AND SIZES. TEST PIT INFORMATION SHALL BE GIVEN TO THE ENGINEER PRIOR TO CONSTRUCTION TO PERMIT ADJUSTMENTS AS REQUIRED TO AVOID CONFLICTS. THE CONTRACTOR SHALL NOTIFY THE UNDER SIGNED PROFESSIONAL IMMEDIATELY IF ANY FIELD CONDITIONS ENCOUNTERED DIFFER MATERIALLY FROM THOSE REPRESENTED HEREON. SUCH CONDITIONS COULD RENDER THE DESIGNS HEREON INAPPROPRIATE OR INEFFECTIVE.

2. UTILITY RELOCATIONS SHOWN HEREON, IF ANY, ARE FOR INFORMATIONAL PURPOSES ONLY AND MAY NOT REPRESENT ALL REQUIRED UTILITY RELOCATIONS. THE CONTRACTOR IS RESPONSIBLE FOR PERFORMING AND/OR COORDINATING ALL REQUIRED UTILITY RELOCATIONS IN COOPERATION WITH THE RESPECTIVE UTILITY COMPANY/AUTHORITIES.

3. STORM SEWERS SHALL BE CLASS III (OR HIGHER IF NOTED) REINFORCED CONCRETE PIPE (RCP) WITH "O" RING GASKETS OR INTERNALLY PRELUBRICATED GASKET (TYLOX SUPERSEAL OR EQUIVALENT, ADS N-12 HIGH DENSITY POLYETHYLENE PIPE (HDPE), AS NOTED ON THE PLAN, OR APPROVED EQUAL. PROPER PIPE COVERAGE SHALL BE MAINTAINED DURING ALL PHASES OF CONSTRUCTION. PIPE LENGTHS SHOWN HEREON ARE FROM CENTER OF STRUCTURE TO CENTER OF STRUCTURE.

4. CONTRACTOR IS RESPONSIBLE TO DETERMINE WHEN SPECIAL OR OVERSIZED DRAINAGE STRUCTURES ARE REQUIRED. CONTRACTOR TO SUBMIT SHOP DRAWINGS FOR ALL SPECIAL (OVERSIZED) DRAINAGE STRUCTURES TO THE TOWNSHIP ENGINEER FOR APPROVAL PRIOR TO INSTALLATION.

5. WATER SERVICE TO BE PROVIDED FROM THE EXISTING WATER MAIN LINE ON SOUTH CENTER DRIVE, OWNED AND OPERATED BY THE TOWN WATER DEPARTMENT. PROPOSED WATER MAIN EXTENSIONS AND FIRE HYDRANT LOCATIONS ARE SUBJECT TO MUNICIPAL REVIEW AND APPROVAL, ACCORDING TO THE NEW JERSEY DEPARTMENT OF ENVIRONMENTAL PROTECTION REGULATIONS, AMERICAN WATERWORKS ASSOCIATION STANDARDS, AND IN THE PINELANDS AREA, THE STANDARDS OF THE PINELANDS COMPREHENSIVE MANAGEMENT PLAN. PIPE MATERIALS SHALL BE CEMENT LINED DUCTILE IRON PIPE, CLASS 52, WITH ASPHALTIC EPOXY TYPE COATING OR HIGH DENSITY POLYETHYLENE (HDPE) SDR-11 PIPE AS NOTED ON THE PLANS. WATER MAINS SHALL BE INSTALLED TO PROVIDE A MINIMUM 4 FEET OF COVER FROM THE TOP OF PIPE TO THE PROPOSED GRADE.

6. SANITARY SEWER SERVICE SHALL BE PROVIDED BY FORCE MAIN CONNECTION TO EXISTING SEWER MAIN LOCATED WITHIN THE SHOPPING CENTER ON LOT 1.07. PROPOSED SEWER MAIN EXTENSIONS AND MANHOLE LOCATIONS ARE SUBJECT TO MUNICIPAL REVIEW AND APPROVAL, ACCORDING TO NEW JERSEY DEPARTMENT OF ENVIRONMENTAL PROTECTION REGULATIONS. PIPE MATERIALS SHALL BE PVC SDR-35, EXCEPT AS NOTED OTHERWISE ON THE PLANS. EXCEPT WHERE SHALLOWER DEPTHS ARE PERMITTED BY THE M

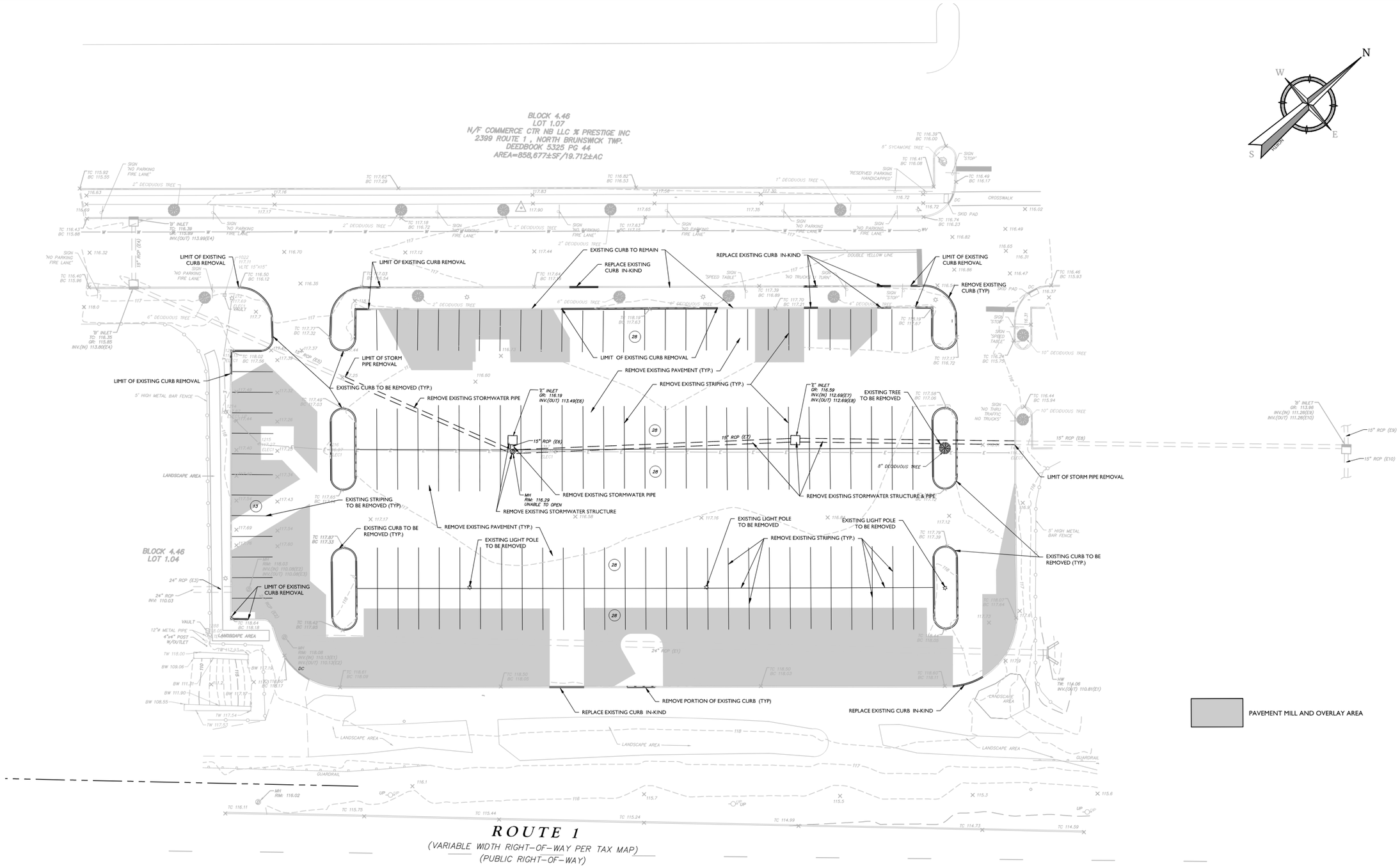

Colliers Engineering & Design

www.colliersengineering.com

Copyright © 2023. Colliers Engineering & Design All Rights Reserved. This drawing and all the information contained herein is authorized for use only by the party for whom the services were contracted or to whom it is certified. This drawing may not be copied, reused, disclosed, distributed or relied upon for any other purpose without the express written consent of Colliers Engineering & Design.

Doing Business as MASER CONSULTING

PROTECT YOURSELF
ALL STATES REQUIRE NOTIFICATION OF EXCAVATORS, DESIGNERS, OR ANY PERSON PREPARING TO DISTURB THE EARTH'S SURFACE ANYWHERE IN ANY STATE

Know what's below. Call before you dig.

FOR STATE SPECIFIC DIRECT PHONE NUMBERS
VISIT: WWW.CALL811.COM

REV	DATE	DRAWN BY	DESCRIPTION

Digitally signed by Vincent Kelly
Date: 2023.04.28 12:22:04-04'00'

Vincent D. Kelly
NEW JERSEY LICENSED PROFESSIONAL ENGINEER
LICENSE NUMBER: GE55812
COLLIERS ENGINEERING & DESIGN, INC.
N.J. C.O.A. #: 24GA27986500

PRELIMINARY/FINAL
MAJOR SITE PLAN

FOR

PRESTIGE COMMERCE CENTER

BLOCK 4.46, LOTS 1.04 & 1.07
BLOCK 4.461, LOT 1.07

TOWNSHIP OF NORTH BRUNSWICK
MIDDLESEX COUNTY
NEW JERSEY

Colliers Engineering & Design
HOLMDEL (Headquarters)
101 Crawfords Corner Road, Suite 3400
Holmdel, NJ 07733
Phone: 732.383.1950
COLLIERS ENGINEERING & DESIGN, INC.
DOING BUSINESS AS MASER CONSULTING

SCALE:	DATE:	DRAWN BY:	CHECKED BY:
AS SHOWN	04/27/2023	MB & PC	VDK
PROJECT NUMBER: 21000124A	DRAWING NAME: C-DEMO		

SHEET TITLE:
SITE DEMOLITION PLAN

SHEET NUMBER:
2 of 14

NOTE: DO NOT SCALE DRAWINGS FOR CONSTRUCTION.

2021210001124A\Engineering\Drawings\Engineering\Site Plans\C-DEMO.dwg\C-02-DEMOLITION By: PCHICHLOW

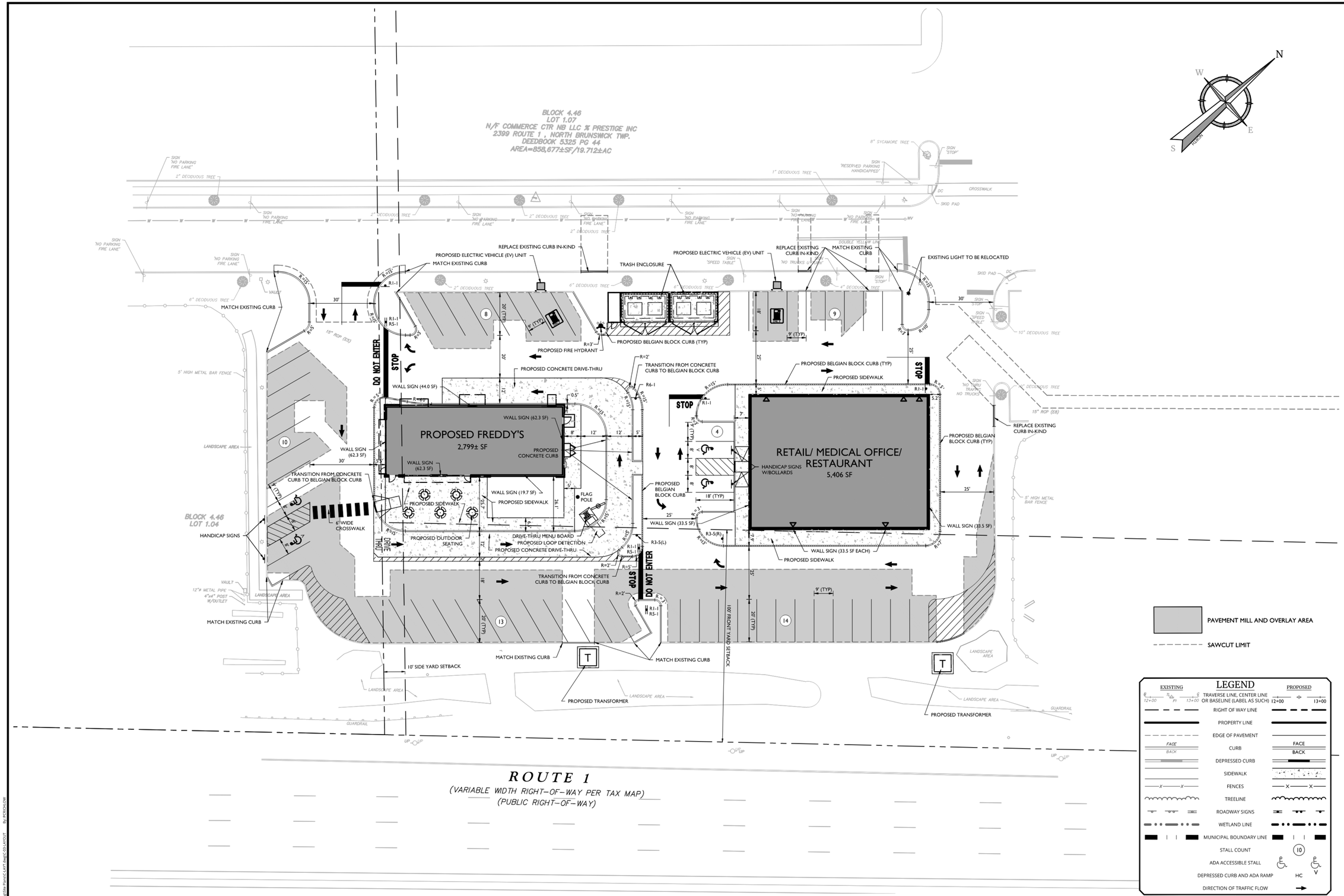

Colliers Engineering & Design

www.colliersengineering.com

Copyright © 2023. Colliers Engineering & Design All Rights Reserved. This drawing and all the information contained herein is authorized for use only by the party for whom the services were contracted or to whom it is certified. This drawing may not be copied, reused, disclosed, distributed or relied upon for any other purpose without the express written consent of Colliers Engineering & Design.

Doing Business as MASER CONSULTING

811 Know what's below. Call before you dig.

PROTECT YOURSELF
ALL STATES REQUIRE NOTIFICATION OF EXCAVATORS, DESIGNERS, OR ANY PERSON PREPARING TO DISTURB THE EARTH'S SURFACE ANYWHERE IN ANY STATE

FOR STATE SPECIFIC DIRECT PHONE NUMBERS VISIT: WWW.CALL811.COM

REV	DATE	DRAWN BY	DESCRIPTION

Digitally signed by Vincent Kelly
Date: 2023.04.28 12:24:02 -04'00'

Vincent D. Kelly
NEW JERSEY LICENSED PROFESSIONAL ENGINEER
LICENSE NUMBER: GE55812
COLLIERS ENGINEERING & DESIGN, INC.
N.J. C.O.A. #: 24GA27986500

PRELIMINARY/FINAL MAJOR SITE PLAN

FOR

PRESTIGE COMMERCE CENTER

BLOCK 4.46, LOTS 1.04 & 1.07
BLOCK 4.461, LOT 1.07

TOWNSHIP OF NORTH BRUNSWICK
MIDDLESEX COUNTY
NEW JERSEY

Colliers Engineering & Design
HOLMDEL (Headquarters)
101 Crawfords Corner Road, Suite 3400
Holmdel, NJ 07733
Phone: 732.383.1950
COLLIERS ENGINEERING & DESIGN, INC. DOING BUSINESS AS MASER CONSULTING

SCALE:	DATE:	DRAWN BY:	CHECKED BY:
AS SHOWN	04/27/2023	MB & PC	VDK
PROJECT NUMBER: 21000124A		DRAWING NAME: C-LAYT	

SHEET TITLE:
DIMENSION PLAN

SHEET NUMBER:
3 of 14

NOTE: DO NOT SCALE DRAWINGS FOR CONSTRUCTION.

2021210001\24A\Engineering\Drawings\Engineering\Site Plans\C-LAYT.dwg\C-03-LAYOUT By: PCRICHLOW

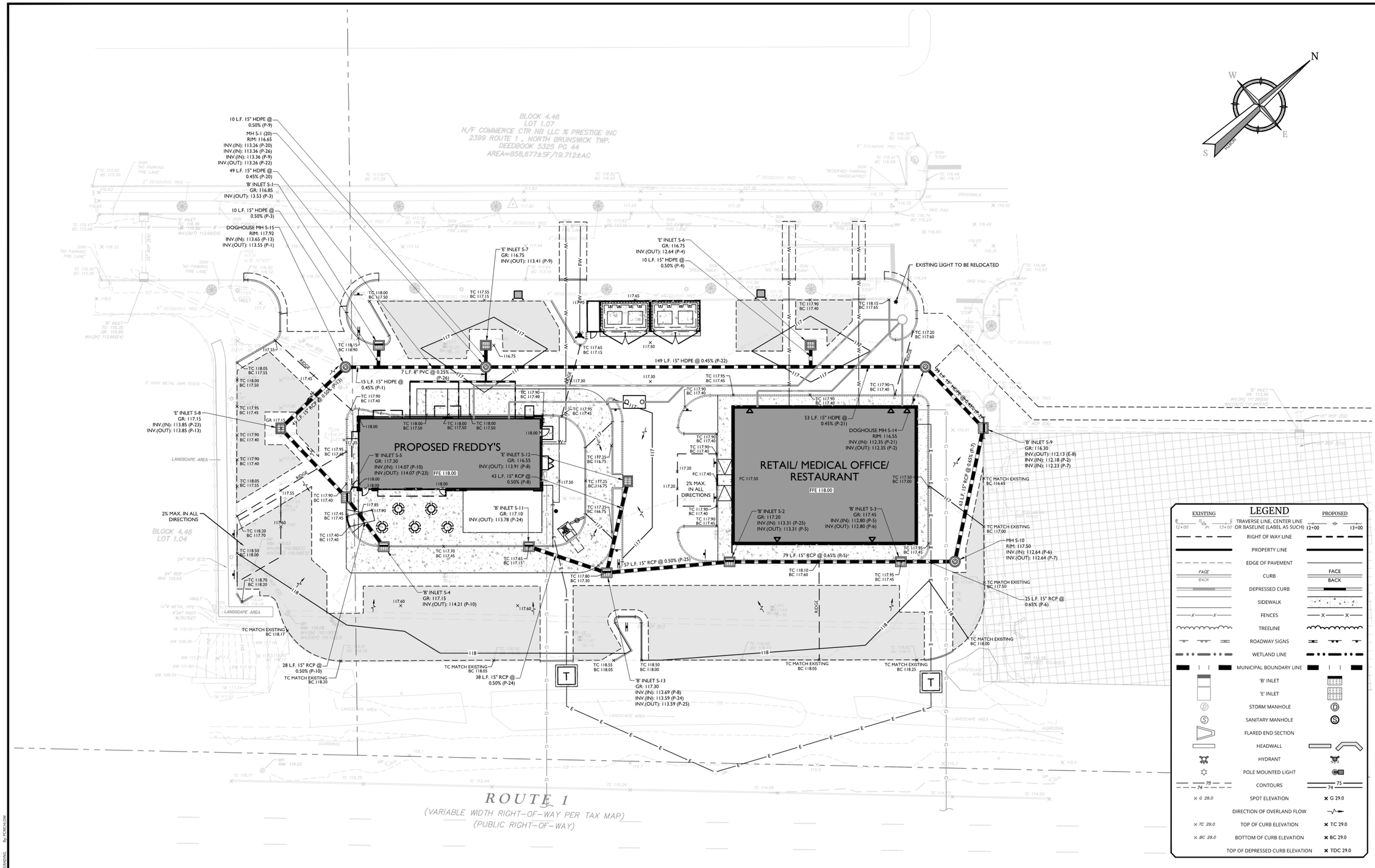

LEGEND

EXISTING		PROPOSED
12+00 TRAVERSE LINE, CENTER LINE OR BASELINE (LABEL AS SUCH) 13+00		12+00 13+00
	RIGHT OF WAY LINE	
	PROPERTY LINE	
	EDGE OF PAVEMENT	
FACE	CURB	FACE
BACK	DEPRESSED CURB	BACK
	SIDEWALK	
	FENCES	
	TREELINE	
	ROADWAY SIGNS	
	WETLAND LINE	
	MUNICIPAL BOUNDARY LINE	
	'B' INLET	
	'E' INLET	
	STORM MANHOLE	
	SANITARY MANHOLE	
	FLARED END SECTION	
	HEADWALL	
	HYDRANT	
	POLE MOUNTED LIGHT	
75 / 74	CONTOURS	75 / 74
× G 29.0	SPOT ELEVATION	× G 29.0
	DIRECTION OF OVERLAND FLOW	
× TC 29.0	TOP OF CURB ELEVATION	× TC 29.0
× BC 29.0	BOTTOM OF CURB ELEVATION	× BC 29.0
	TOP OF DEPRESSED CURB ELEVATION	× TDC 29.0

PAVEMENT MILL AND OVERLAY AREA

SAWCUT LIMIT

20 0 20 40

SCALE : 1" = 20'

NOTE: DO NOT SCALE DRAWINGS FOR CONSTRUCTION.

Colliers Engineering & Design

www.colliersengineering.com

Copyright © 2023. Colliers Engineering & Design All Rights Reserved. This drawing and all the information contained herein is authorized for use only by the party for whom the services were contracted or to whom it is certified. This drawing may not be copied, reused, disclosed, distributed or relied upon for any other purpose without the express written consent of Colliers Engineering & Design.

Doing Business as MASER CONSULTING

811 Know what's below. Call before you dig.

PROTECT YOURSELF
ALL STATES REQUIRE NOTIFICATION OF EXCAVATORS, DESIGNERS, OR ANY PERSON PREPARING TO DISTURB THE EARTH'S SURFACE ANYWHERE IN ANY STATE

FOR STATE SPECIFIC DIRECT PHONE NUMBERS VISIT: WWW.CALL811.COM

REV	DATE	DRAWN BY	DESCRIPTION

Digitally signed by Vincent Kelly
Date: 2023.04.28 12:24:04 -04'00'

Vincent D. Kelly
NEW JERSEY LICENSED PROFESSIONAL ENGINEER
LICENSE NUMBER: GE55812
COLLIERS ENGINEERING & DESIGN, INC.
N.J. C.O.A. #: 24GA27986500

PRELIMINARY/FINAL MAJOR SITE PLAN

FOR

PRESTIGE COMMERCE CENTER

BLOCK 4.46, LOTS 1.04 & 1.07
BLOCK 4.461, LOT 1.07

TOWNSHIP OF NORTH BRUNSWICK
MIDDLESEX COUNTY
NEW JERSEY

Colliers Engineering & Design
HOLMDEL (Headquarters)
101 Crawfords Corner Road, Suite 3400
Holmdel, NJ 07733
Phone: 732.383.1950
COLLIERS ENGINEERING & DESIGN, INC. DOING BUSINESS AS MASER CONSULTING

SCALE:	DATE:	DRAWN BY:	CHECKED BY:
AS SHOWN	04/27/2023	MB & PC	VDK

PROJECT NUMBER:	DRAWING NAME:
21000124A	C-GRAD

SHEET TITLE:

GRADING PLAN

SHEET NUMBER:

04 of 14

2021\21000124A\Engineering\Drawings\Engineering\Site Plans\C-GRAD.dwg\C-04-GRADING By: PCRICHLOW

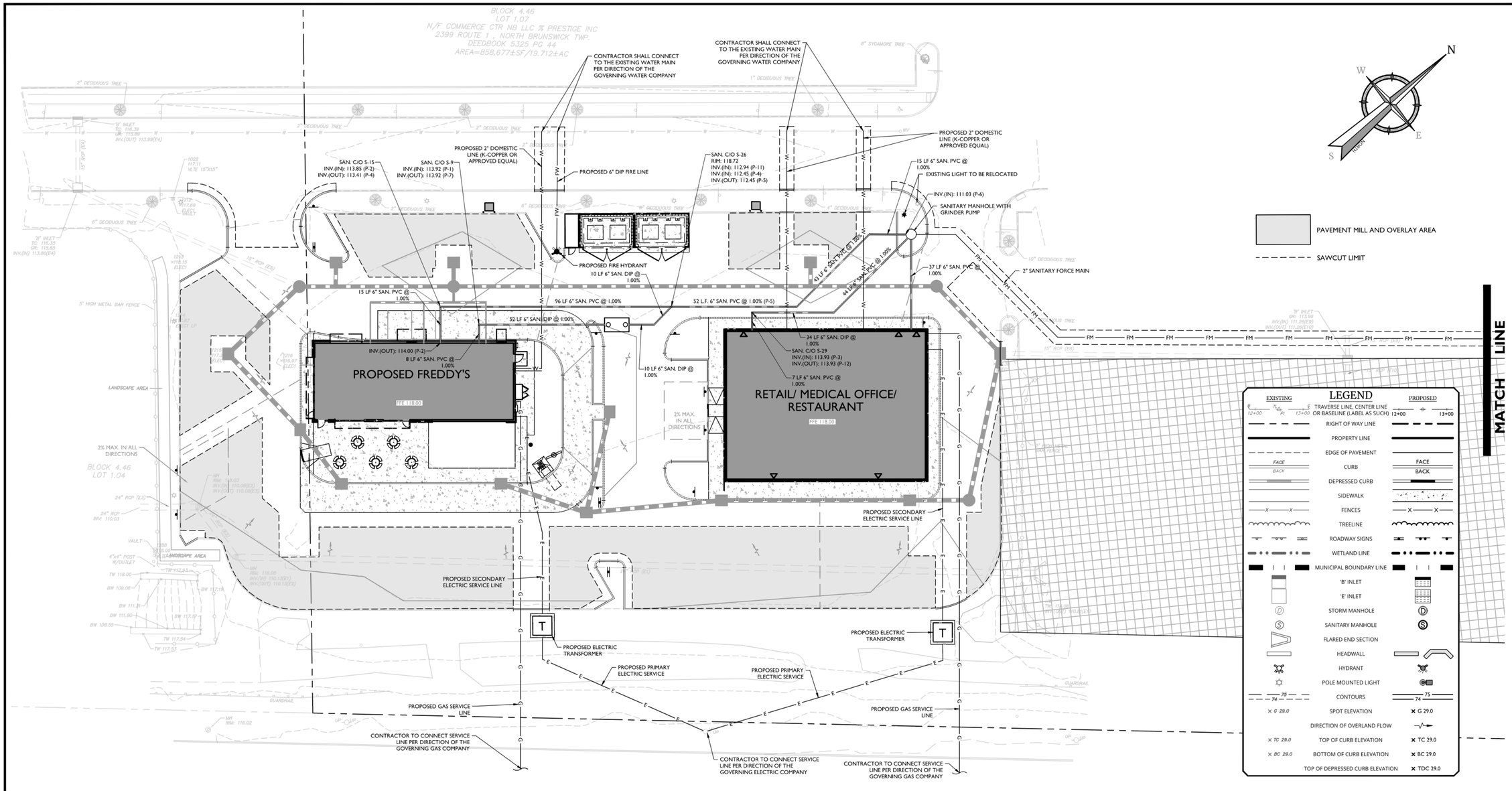

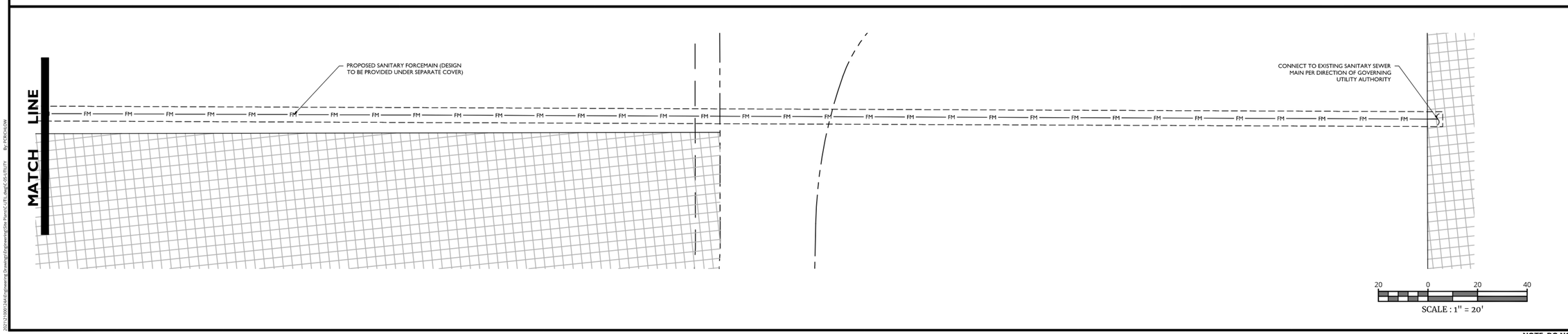

Colliers Engineering & Design

www.colliersengineering.com

Copyright © 2023. Colliers Engineering & Design All Rights Reserved. This drawing and all the information contained herein is authorized for use only by the party for whom the services were contracted or to whom it is certified. This drawing may not be copied, reused, disclosed, distributed or relied upon for any other purpose without the express written consent of Colliers Engineering & Design.

Doing Business as MASER CONSULTING

811 Know what's below. Call before you dig.

PROTECT YOURSELF
ALL STATES REQUIRE NOTIFICATION OF EXCAVATORS, DESIGNERS, OR ANY PERSON PREPARING TO DISTURB THE EARTH'S SURFACE ANYWHERE IN ANY STATE

FOR STATE SPECIFIC DIRECT PHONE NUMBERS VISIT: WWW.CALL811.COM

REV	DATE	DRAWN BY	DESCRIPTION

Digitally signed by Vincent Kelly
Date: 2023.04.28 12:24:07 -04'00'

Vincent D. Kelly
NEW JERSEY LICENSED PROFESSIONAL ENGINEER
LICENSE NUMBER: GE55812
COLLIERS ENGINEERING & DESIGN, INC.
N.J. C.O.A. #: 24GA27986500

PRELIMINARY/FINAL MAJOR SITE PLAN

FOR

PRESTIGE COMMERCE CENTER

BLOCK 4.46, LOTS 1.04 & 1.07
BLOCK 4.461, LOT 1.07

TOWNSHIP OF NORTH BRUNSWICK
MIDDLESEX COUNTY
NEW JERSEY

Colliers Engineering & Design
HOLMDEL (Headquarters)
101 Crawfords Corner Road, Suite 3400
Holmdel, NJ 07733
Phone: 732.383.1950
COLLIERS ENGINEERING & DESIGN, INC.
DOING BUSINESS AS MASER CONSULTING

SCALE:	DATE:	DRAWN BY:	CHECKED BY:
AS SHOWN	04/27/2023	MB & PC	VDK

PROJECT NUMBER:	DRAWING NAME:
21000124A	C-UTIL

SHEET TITLE:

UTILITIES PLAN

SHEET NUMBER:

5 of 14

NOTE: DO NOT SCALE DRAWINGS FOR CONSTRUCTION.

2021\21000124A\Engineering\Drawings\Engineering\Site Plans\C-UTIL.dwg\C-05-UTILITY By: KCRICHLOW

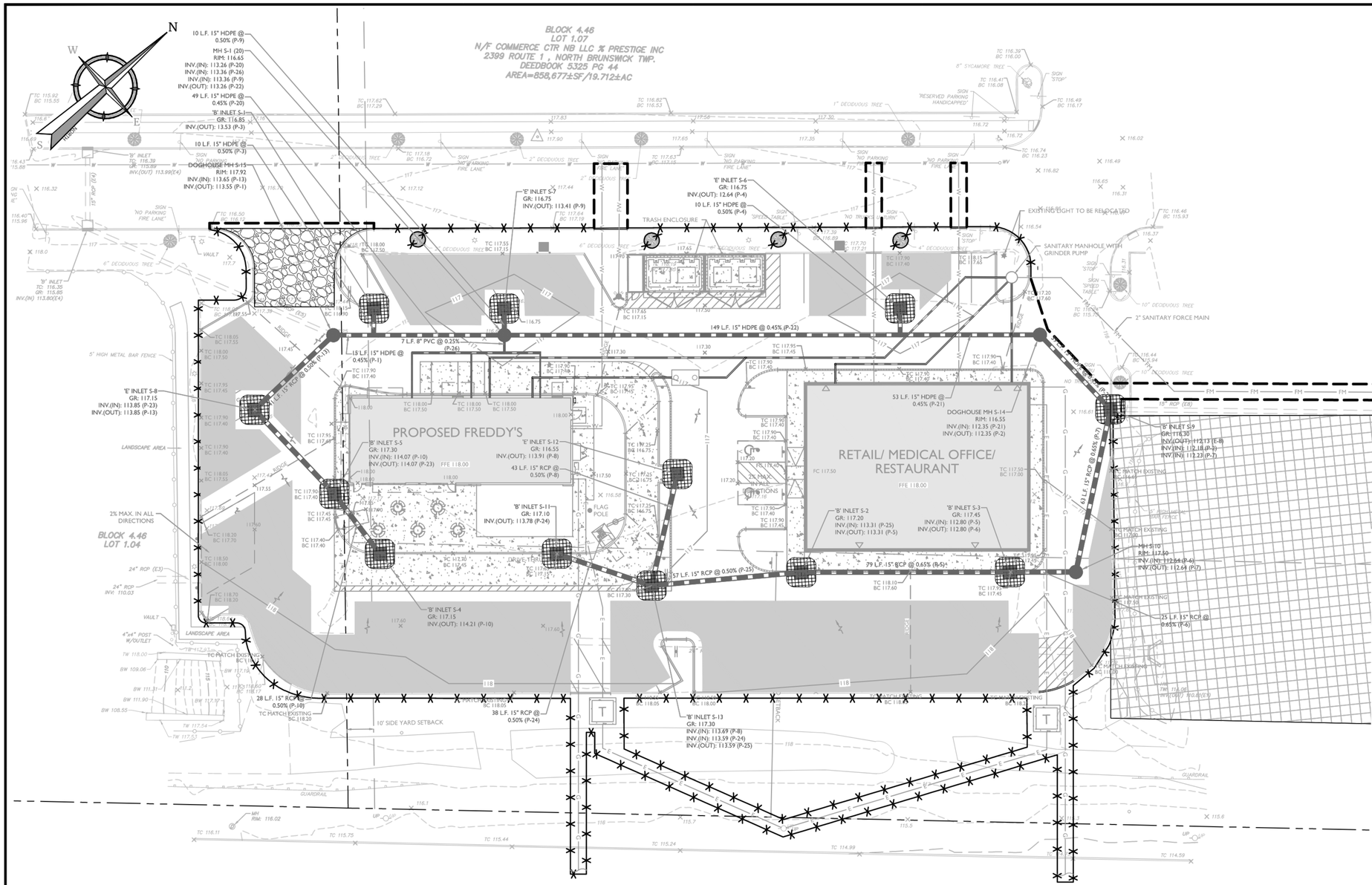

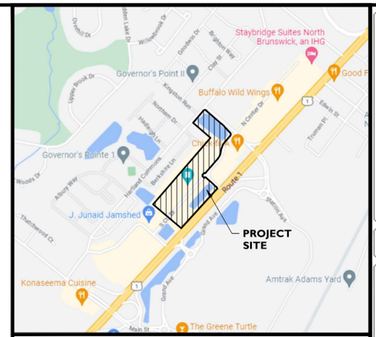

LOCATION MAP
SOURCE: GOOGLE EARTH
SCALE: 1" = 1,000'

SOIL EROSION LEGEND

PROPOSED INLET FILTER	
PROPOSED AREA OF TEMPORARY TOPSOIL STOCK PILE	
PROPOSED SILT FENCE	—X— —X—
PROPOSED LIMIT OF DISTURBANCE	
PROPOSED CONSTRUCTION #1 ENTRANCE, 1 1/2"-2" Ø STONE (50' LONG x 25' WIDE x 12")	
TREE PROTECTION FENCE	

PAVEMENT MILL AND OVERLAY AREA

SOIL EROSION PLAN NOTES:

1. PROPOSED LIMIT OF DISTURBANCE = 65,950 SF (1.514 AC.)
2. **THIS PROJECT IS EXEMPT FROM SOIL COMPACTION TESTING AND REMEDIATION AS IT IS LOCATED IN AN URBAN REDEVELOPMENT AREA.**

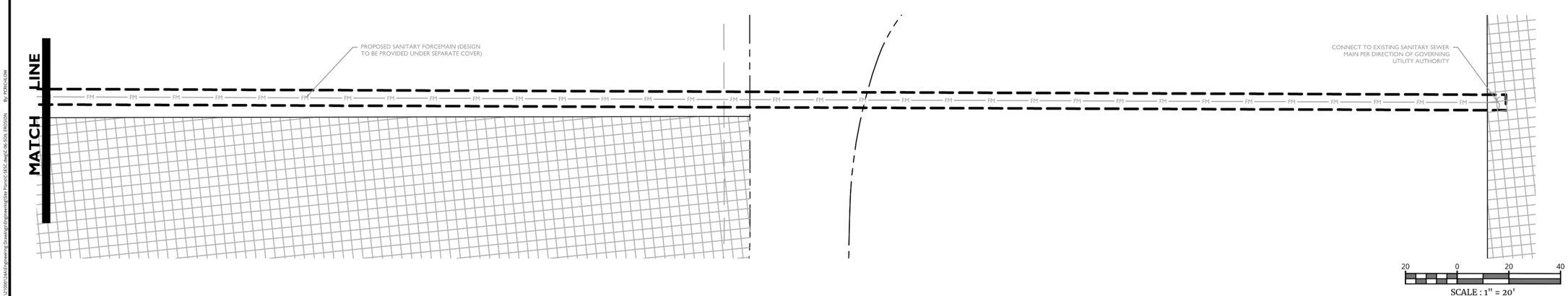

Colliers Engineering & Design

www.colliersengineering.com

Copyright © 2023. Colliers Engineering & Design All Rights Reserved. This drawing and all the information contained herein is authorized for use only by the party for whom the services were contracted or to whom it is certified. This drawing may not be copied, reused, disclosed, distributed or relied upon for any other purpose without the express written consent of Colliers Engineering & Design.

Doing Business as MASER CONSULTING

PROTECT YOURSELF
ALL STATES REQUIRE NOTIFICATION OF EXCAVATORS, DESIGNERS, OR ANY PERSON PREPARING TO DISTURB THE EARTH'S SURFACE ANYWHERE IN ANY STATE
Know what's below. Call before you dig.
FOR STATE SPECIFIC DIRECT PHONE NUMBERS VISIT: WWW.CALL811.COM

REV	DATE	DRAWN BY	DESCRIPTION

Digitally signed by Vincent Kelly
Date: 2023.04.28 12:24:09-04'00'

Vincent D. Kelly
NEW JERSEY LICENSED PROFESSIONAL ENGINEER
LICENSE NUMBER: GE55812
COLLIERS ENGINEERING & DESIGN, INC.
N.J. C.O.A. #: 24GA27986500

PRELIMINARY/FINAL MAJOR SITE PLAN

FOR

PRESTIGE COMMERCE CENTER

BLOCK 4.46, LOTS 1.04 & 1.07
BLOCK 4.461, LOT 1.07

TOWNSHIP OF NORTH BRUNSWICK
MIDDLESEX COUNTY
NEW JERSEY

Colliers Engineering & Design
HOLMDEL (Headquarters)
101 Crawfords Corner Road, Suite 3400
Holmdel, NJ 07733
Phone: 732.383.1950
COLLIERS ENGINEERING & DESIGN, INC
DOING BUSINESS AS MASER CONSULTING

SCALE:	DATE:	DRAWN BY:	CHECKED BY:
AS SHOWN	04/27/2023	MB & PC	VDK

PROJECT NUMBER:	DRAWING NAME:
21000124A	C-SESC

SHEET TITLE:
SOIL EROSION & SEDIMENT CONTROL PLAN

SHEET NUMBER:
6 of 14

2021\21000124A\Engineering Drawings\Engineering\Site Plans\C-SESC.dwg\C-06-SOIL EROSION By: PCRICHLOW

NOTE: DO NOT SCALE DRAWINGS FOR CONSTRUCTION.

FREEHOLD SOIL CONSERVATION DISTRICT NOTES

MCNJ-SOIL-NOTE-1005 05/01/17

1. THE FREEHOLD SOIL CONSERVATION DISTRICT SHALL BE NOTIFIED FORTY-EIGHT (48) HOURS IN ADVANCE OF ANY SOIL DISTURBING ACTIVITY.
2. ALL SOIL EROSION AND SEDIMENT CONTROL PRACTICES ARE TO BE INSTALLED PRIOR TO SOIL DISTURBANCE, OR IN THEIR PROPER SEQUENCE, AND MAINTAINED UNTIL PERMANENT PROTECTION IS ESTABLISHED.
3. ANY CHANGES TO THE CERTIFIED SOIL EROSION AND SEDIMENT CONTROL PLANS WILL REQUIRE THE SUBMISSION OF REVISED SOIL EROSION AND SEDIMENT CONTROL PLANS TO THE DISTRICT FOR RE-CERTIFICATION. THE REVISED PLANS MUST MEET ALL CURRENT STATE SOIL EROSION AND SEDIMENT CONTROL STANDARDS.
4. N.J.S.A 4:24-39 ET. SEQ. REQUIRES THAT NO CERTIFICATES OF OCCUPANCY BE ISSUED BEFORE THE DISTRICT DETERMINES THAT A PROJECT OR PORTION THEREOF IS IN FULL COMPLIANCE WITH THE CERTIFIED PLAN AND STANDARDS FOR SOIL EROSION AND SEDIMENT CONTROL IN NEW JERSEY AND A REPORT OF COMPLIANCE HAS BEEN ISSUED. UPON WRITTEN REQUEST FROM THE APPLICANT, THE DISTRICT MAY ISSUE A REPORT OF COMPLIANCE WITH CONDITIONS ON A LOT-BY-LOT OR SECTION-BY-SECTION BASIS, PROVIDED THAT THE PROJECT OR PORTION THEREOF IS IN SATISFACTORY COMPLIANCE WITH THE SEQUENCE OF DEVELOPMENT AND TEMPORARY MEASURES FOR SOIL EROSION AND SEDIMENT CONTROL HAVE BEEN IMPLEMENTED, INCLUDING PROVISIONS FOR STABILIZATION AND SITE WORK.
5. ANY STOCKPILE OR DISTURBED AREAS THAT WILL BE LEFT EXPOSED MORE THAN **FOURTEEN (14) DAYS**, AND NOT SUBJECT TO CONSTRUCTION TRAFFIC, WILL IMMEDIATELY RECEIVE A TEMPORARY SEEDING. IF THE SEASON PREVENTS THE ESTABLISHMENT OF TEMPORARY COVER, THE DISTURBED AREAS WILL BE MULCHED WITH STRAW, OR EQUIVALENT MATERIAL, AT A RATE OF 2 TO 2 ½ TONS PER ACRE, ACCORDING TO THE STANDARD FOR STABILIZATION WITH MULCH ONLY.
6. IMMEDIATELY FOLLOWING INITIAL DISTURBANCE OR ROUGH GRADING, ALL CRITICAL AREAS SUBJECT TO EROSION (I.E. SOIL STOCKPILES, STEEP SLOPES AND ROADWAY EMBANKMENTS) WILL RECEIVE TEMPORARY SEEDING IN COMBINATION WITH STRAW MULCH OR A SUITABLE EQUIVALENT, AND A MULCH ANCHOR, IN ACCORDANCE WITH STATE STANDARDS.
7. A SUB-BASE COURSE WILL BE APPLIED IMMEDIATELY FOLLOWING ROUGH GRADING AND INSTALLATION OF IMPROVEMENTS TO STABILIZE STREETS, ROADS, DRIVEWAYS, AND PARKING AREAS. IN AREAS WHERE NO UTILITIES ARE PRESENT, THE SUB-BASE SHALL BE INSTALLED WITHIN FIFTEEN (15) DAYS OF THE PRELIMINARY GRADING.
8. THE STANDARD FOR STABILIZED CONSTRUCTION ACCESS REQUIRES THE INSTALLATION OF A PAD OF CLEAN CRUSHED STONE AT POINTS WHERE TRAFFIC WILL BE ACCESSING THE CONSTRUCTION SITE. AFTER INTERIOR ROADWAYS ARE PAVED, INDIVIDUAL LOTS REQUIRE A STABILIZED CONSTRUCTION ACCESS CONSISTING OF ONE INCH TO TWO INCH (1" - 2") STONE FOR A MINIMUM LENGTH OF TEN FEET (10') EQUAL TO THE LOT ENTRANCE WIDTH. ALL OTHER ACCESS POINTS SHALL BE BLOCKED OFF.
9. ALL SOIL WASHED, DROPPED, SPILLED, OR TRACKED OUTSIDE THE LIMIT OF DISTURBANCE ON ORTO PUBLIC RIGHT-OF-WAYS WILL BE REMOVED IMMEDIATELY.
10. PERMANENT VEGETATION IS TO BE SEEDED OR SODDED ON ALL EXPOSED AREAS WITHIN TEN (10) DAYS AFTER FINAL GRADING.
11. AT THE TIME THAT SITE PREPARATION FOR PERMANENT VEGETATIVE STABILIZATION IS GOING TO BE ACCOMPLISHED, ANY SOIL THAT WILL NOT PROVIDE A SUITABLE ENVIRONMENT TO SUPPORT ADEQUATE VEGETATIVE GROUND COVER SHALL BE REMOVED OR TREATED IN SUCH A WAY THAT IT WILL PERMANENTLY ADJUST THE SOIL CONDITIONS AND RENDER IT SUITABLE FOR VEGETATIVE GROUND COVER. IF THE REMOVAL OR TREATMENT OF THE SOIL WILL NOT PROVIDE SUITABLE CONDITIONS, NON-VEGETATIVE MEANS OF PERMANENT GROUND STABILIZATION WILL HAVE TO BE EMPLOYED.
12. IN ACCORDANCE WITH THE STANDARD FOR MANAGEMENT OF HIGH ACID PRODUCING SOILS, ANY SOIL HAVING A PH OF 4 OR LESS OR CONTAINING IRON SULFIDES SHALL BE ULTIMATELY PLACED OR BURIED WITH LIMESTONE APPLIED AT THE RATE OF 10 TONS/ACRE, (OR 450 LBS/1,000 SQ FT OF SURFACE AREA) AND COVERED WITH A MINIMUM OF 12" OF SETTLED SOIL WITH A PH OF 5 OR MORE, OR 24" WHERE TREES OR SHRUBS ARE TO BE PLANTED.
13. CONDUIT OUTLET PROTECTION MUST BE INSTALLED AT ALL REQUIRED OUTFALLS PRIOR TO THE DRAINAGE SYSTEM BECOMING OPERATIONAL.
14. UNFILTERED DEWATERING IS NOT PERMITTED. NECESSARY PRECAUTIONS MUST BE TAKEN DURING ALL DEWATERING OPERATIONS TO MINIMIZE SEDIMENT TRANSFER. ANY DEWATERING METHODS USED MUST BE IN ACCORDANCE WITH THE STANDARD FOR DEWATERING.
15. SHOULD THE CONTROL OF DUST AT THE SITE BE NECESSARY, THE SITE WILL BE SPRINKLED UNTIL THE SURFACE IS WET. TEMPORARY VEGETATIVE COVER SHALL BE ESTABLISHED OR MULCH SHALL BE APPLIED AS REQUIRED BY THE STANDARD FOR DUST CONTROL.
16. STOCKPILE AND STAGING LOCATIONS ESTABLISHED IN THE FIELD SHALL BE PLACED WITHIN THE LIMIT OF DISTURBANCE ACCORDING TO THE CERTIFIED PLAN. STAGING AND STOCKPILES NOT LOCATED WITHIN THE LIMIT OF DISTURBANCE WILL REQUIRE CERTIFICATION OF A REVISED SOIL EROSION AND SEDIMENT CONTROL PLAN. CERTIFICATION OF A NEW SOIL EROSION AND SEDIMENT CONTROL PLAN MAY BE REQUIRED FOR THESE ACTIVITIES IF AN AREA GREATER THAN 5,000 SQUARE FEET IS DISTURBED.
17. ALL SOIL STOCKPILES ARE TO BE TEMPORARILY STABILIZED IN ACCORDANCE WITH SOIL EROSION AND SEDIMENT CONTROL NOTE #6.
18. THE PROPERTY OWNER SHALL BE RESPONSIBLE FOR ANY EROSION OR SEDIMENTATION THAT MAY OCCUR BELOW STORMWATER OUTFALLS OR OFFSITE AS A RESULT OF CONSTRUCTION OF THE PROJECT.

FREEHOLD SOIL CONSERVATION DISTRICT
4000 KOZLOSKI ROAD, FREEHOLD, NJ 07728-5033,
PHONE (732) 683-8500, FAX (732) 683-9140,
EMAIL: INFO@FREEHOLDSCD.ORG.

SEQUENCE OF COMMERCIAL CONSTRUCTION

MCNJ-SOIL-NOTE-1500

1. CLEARING OF ENTRANCE AND LIMIT OF DISTURBANCE FOR INSTALLATION OF SILT FENCE AND CONSTRUCTION ENTRANCE PAD (1 WEEK). 04/24/23
2. CLEARING AND ROUGH GRADING (4 WEEKS) 05/01/08
3. INSTALL STORM DRAINAGE SYSTEM, CONDUIT OUTLET PROTECTION AND ALL OTHER UTILITIES. INSTALL INLET PROTECTION (6 WEEKS)
4. CONSTRUCT CURBS AND PLACE ROAD SUBBASE (6 WEEKS).
5. CLEAR AND GRADE BUILDING AREAS AND CONSTRUCT BUILDINGS. ALL DISTURBED AREAS SHALL BE STABILIZED AS DEFINED IN SOIL EROSION AND SEDIMENT CONTROL NOTES. (ONGOING FROM COMMENCEMENT OF PROJECT).
6. ALL SURFACES HAVING LAWN OR LANDSCAPING AS FINAL COVER ARE TO BE PROVIDED 5" OF TOPSOIL, FIRM IN PLACE, PRIOR TO SEEDING, SODDING OR PLANTING. PLACE PERMANENT VEGETATION COVER. (1 WEEK)
7. PAVE ROADS AND COMPLETE FINAL LANDSCAPING (1 MONTH)
8. REMOVE TEMPORARY ACCESS PROTECTION, SILT FENCE, AND INLET PROTECTION AFTER ALL DISTURBED AREAS HAVE BEEN STABILIZED.

STANDARD FOR VEGETATIVE COVER

MCNJ-SOIL-NOTE-1100 MOD: 04/05/23 12/01/17

I. SITE PREPARATION

A. GRADE AS NEEDED AND FEASIBLE TO PERMIT THE USE OF CONVENTIONAL EQUIPMENT FOR SEEDBED PREPARATION, SEEDING, MULCH APPLICATION, AND MULCH ANCHORING. ALL GRADING SHOULD BE DONE IN ACCORDANCE WITH STANDARD FOR LAND GRADING.

B. IMMEDIATELY PRIOR TO SEEDING AND TOPSOIL APPLICATION, THE SUBSOIL SHALL BE EVALUATED FOR COMPACTION IN ACCORDANCE WITH THE STANDARD FOR LAND GRADING.

C. TOPSOIL SHOULD BE HANDLED ONLY WHEN IT IS DRY ENOUGH TO WORK WITHOUT DAMAGING THE SOIL STRUCTURE. UNIFORM APPLICATION TO AN AVERAGE DEPTH OF 5 INCHES, MINIMUM OF 4 INCHES, FIRMED IN PLACE IS REQUIRED. ALTERNATIVE DEPTHS MAY BE CONSIDERED WHERE SPECIAL REGULATORY AND/OR INDUSTRY DESIGN STANDARDS ARE APPROPRIATE SUCH AS ON GOLF COURSES, SPORTS FIELDS, LANDFILL CAPPING ETC. TOPSOIL SHALL BE AMENDED WITH ORGANIC MATTER, AS NEEDED, IN ACCORDANCE WITH THE STANDARD FOR TOPSOILING.

D. INSTALL NEEDED EROSION CONTROL PRACTICES OR FACILITIES SUCH AS DIVERSIONS, GRADE-STABILIZATION STRUCTURES, CHANNEL STABILIZATION MEASURES, SEDIMENT BASINS, AND WATERWAYS.

2. SEEDBED PREPARATION

A. UNIFORMLY APPLY GROUND LIMESTONE AND FERTILIZER TO TOPSOIL WHICH HAS BEEN SPREAD AND FIRMED, ACCORDING TO SITE SPECIFIC SOIL TEST RECOMMENDATIONS SUCH AS OFFERED BY RUTGERS CO-OPERATIVE EXTENSION. SOIL SAMPLE MAILERS ARE AVAILABLE FROM THE LOCAL RUTGERS COOPERATIVE EXTENSION OFFICES (HTTP://NJAES.RUTGERS.EDU/COUNTY/).

a. FOR TEMPORARY SEEDING: FERTILIZER SHALL BE APPLIED AT THE RATE OF 500 POUNDS PER ACRE OR 11 POUNDS PER 1,000 SQUARE FEET OF 10-20-10 OR EQUIVALENT WITH 50% WATER INSOLUBLE NITROGEN UNLESS A SOIL TEST INDICATES OTHERWISE. LIMING RATE SHALL BE ESTABLISHED PER SOIL TESTING.

b. FOR PERMANENT SEEDING: FERTILIZER SHALL BE APPLIED AT THE RATE OF 500 POUNDS PER ACRE OR 11 POUNDS PER 1,000 SQUARE FEET OF 10-10-10 OR EQUIVALENT WITH 50% WATER INSOLUBLE NITROGEN UNLESS A SOIL TEST INDICATES OTHERWISE AND INCORPORATED INTO THE SURFACE 4 INCHES. IF FERTILIZER IS NOT INCORPORATED, APPLY ONE-HALF THE RATE DESCRIBED ABOVE DURING SEEDBED PREPARATION AND REPEAT ANOTHER ONE-HALF RATE APPLICATION OF THE SAME FERTILIZER WITHIN 3 TO 5 WEEKS AFTER SEEDING.

B. WORK LIME AND FERTILIZER INTO THE TOPSOIL AS NEARLY AS PRACTICAL TO A DEPTH OF 4 INCHES WITH A DISC, SPRING-TOOTH HARROW, OR OTHER SUITABLE EQUIPMENT. THE FINAL HARROWING OR DISKING OPERATION SHOULD BE ON THE GENERAL CONTOUR. CONTINUE TILLAGE UNTIL A REASONABLE UNIFORM SEEDBED IS PREPARED.

C. HIGH ACID PRODUCING SOIL SOILS HAVING A PH OF 4 OR LESS OR CONTAINING IRON SULFIDE SHALL BE COVERED WITH A MINIMUM OF 12 INCHES OF SOIL HAVING A PH OF 5 OR MORE BEFORE INITIATING SEEDBED REPARATION. SEE STANDARD FOR MANAGEMENT OF HIGH ACID-PRODUCING SOILS FOR SPECIFIC REQUIREMENTS.

D. IMMEDIATELY PRIOR TO SEEDING AND TOPSOIL APPLICATION, THE SURFACE SHOULD BE SCARIFIED 6" TO 12" WHERE THERE HAS BEEN SOIL COMPACTION. THIS PRACTICE IS PERMISSIBLE ONLY WHERE THERE IS NO DANGER TO UNDERGROUND UTILITIES (CABLES, IRRIGATION SYSTEMS, ETC.). SEE "SOIL DECOMPACTION AND TESTING REQUIREMENTS".

E. REMOVE FROM THE SURFACE ALL STONES 2 INCHES OR LARGER IN ANY DIMENSION AND OTHER DEBRIS SUCH AS WIRE, TREE ROOTS, PIECES OF CONCRETE, CLODS, LUMPS OR OTHER UNSUITABLE MATERIAL.

3. SEEDING

A. TEMPORARY SEEDING SPECIFICATIONS - TEMPORARY VEGETATIVE COVER SHALL CONSIST OF PERENNIAL RYEGRASS APPLIED UNIFORMLY AT A RATE OF 1.0 POUNDS PER 1,000 SQ.FT. (100 LBS/ACRE), OR A MIXTURE FROM TABLE 7-2 OF THE STANDARDS APPROVED BY THE SOIL CONSERVATION DISTRICT.

B. PERMANENT SEEDING SPECIFICATIONS - SELECT AN APPROVED MIXTURE FROM THOSE LISTED BELOW, AN APPROVED MIXTURE FROM TABLE 4-3 OF THE STANDARDS, OR USE A MIXTURE RECOMMENDED BY RUTGERS COOPERATIVE EXTENSION OR NATURAL RESOURCES CONSERVATION SERVICE WHICH IS APPROVED BY THE SOIL CONSERVATION DISTRICT. SEED GERMINATION SHALL HAVE BEEN TESTED WITHIN 12 MONTHS OF THE PLANTING DATE. NO SEED SHALL BE ACCEPTED WITH A GERMINATION TEST DATE MORE THAN 12 MONTHS OLD UNLESS RETESTED. SEED SHALL BE APPLIED AS NOTED BELOW WITHIN THE DATES SPECIFIED IN THE STANDARDS:

I. LAWN AREAS:

MIX #13 (WELL TO MODERATELY DRAINED SOIL):

HARD FESCUE AND/OR	
CHEWING FESCUE AND/OR	
STRONG CREEPING RED FESCUE	175 LBS/ACRE
PERENNIAL RYEGRASS	45 LBS/ACRE
KENTUCKY BLUE GRASS (BLEND)	45 LBS/ACRE

MIX #14 (EXCESSIVELY TO MODERATELY DRAINED SOIL):

TALL FESCUE	265 LBS/ACRE
KENTUCKY BLUE GRASS (BLEND)	20 LBS/ACRE
PERENNIAL RYE GRASS (BLEND)	20 LBS/ACRE

MIX #15 (WELL TO MODERATELY DRAINED SOIL):

HARD FESCUE	130 LBS/ACRE
CHEWING FESCUE	45 LBS/ACRE
STRONG CREEPING RED FESCUE	45 LBS/ACRE
PERENNIAL RYEGRASS	10 LBS/ACRE

MIX #16 (POORLY DRAINED SOIL)

ROUGH BLUEGRASS	90 LBS/ACRE
STRONG CREEPING RED FESCUE	130 LBS/ACRE

OPTIMUM SEEDING DATES:
8/1 - 10/1 (ZONE 5b, 6a); 8/15 - 10/15 (ZONE 6b); 8/15 - 10/30 (ZONE 7a, 7b)

PREVENT OR MINIMIZE THE PRESENCE OF WASTE FROM SUCH MATERIALS IN THE STORMWATER DISCHARGE AUTHORIZED BY THIS PERMIT. (THE PRECEDING SENTENCE DOES NOT APPLY TO ANY MANUFACTURERS' RECOMMENDATIONS ABOUT FERTILIZER OR OTHER MATERIAL THAT CONFLICT WITH THE EROSION AND SEDIMENT CONTROL COMPONENT OF THE FACILITY'S SPPP.)

3. WASTE HANDLING - THE FOLLOWING REQUIREMENTS APPLY ONLY TO CONSTRUCTION SITE WASTE THAT HAS THE POTENTIAL TO BE TRANSPORTED BY THE STORMWATER DISCHARGE AUTHORIZED BY THIS PERMIT. THE HANDLING AT THE CONSTRUCTION SITE OF WASTE BUILDING MATERIAL AND RUBBLE AND OTHER CONSTRUCTION SITE WASTES, INCLUDING LITTER AND HAZARDOUS AND SANITARY WASTES, SHALL CONFORM WITH THE STATE SOLID WASTE MANAGEMENT ACT, N.J.S.A. 13:1E-1 ET SEQ., AND ITS IMPLEMENTING RULES AT N.J.A.C. 7:26, 7:26A, AND 7:26G; THE NEW JERSEY PESTICIDE CONTROL CODE AT N.J.A.C. 7:30; THE STATE LITTER STATUTE (N.J.S.A. 13:1E-99.3); AND OSHA REQUIREMENTS FOR SANITATION AT 29 C.F.R. 1926 (EXCEPT WHERE SUCH CONFORMANCE IS NOT RELEVANT TO THE STORMWATER DISCHARGE AUTHORIZED BY THIS PERMIT). CONSTRUCTION SITES SHALL HAVE ONE OR MORE DESIGNATED WASTE COLLECTION AREAS ONSITE OR ADJACENT TO THE SITE, AND AN ADEQUATE NUMBER OF CONTAINERS (WITH LIDS OR COVERS) FOR WASTE. WASTE SHALL BE COLLECTED FROM SUCH CONTAINERS BEFORE THEY OVERFLOW, AND SPILLS AT SUCH CONTAINERS SHALL BE CLEANED UP IMMEDIATELY.

A. CONSTRUCTION SITE WASTES INCLUDE BUT ARE NOT LIMITED TO:

i. "CONSTRUCTION AND DEMOLITION WASTE," AS DEFINED IN N.J.A.C. 7:26-1.4 AS FOLLOWS: "WASTE BUILDING MATERIAL AND RUBBLE RESULTING FROM CONSTRUCTION, REMODELING, REPAIR, AND DEMOLITION OPERATIONS ON HOUSES, COMMERCIAL BUILDINGS, PAVEMENTS AND OTHER STRUCTURES. THE FOLLOWING MATERIALS MAY BE FOUND IN CONSTRUCTION AND DEMOLITION WASTE: TREATED AND UNTREATED WOOD SCRAP; TREE PARTS, TREE STUMPS AND BRUSH; CONCRETE, ASPHALT, BRICKS, BLOCKS AND OTHER MASONRY; PLASTER AND WALLBOARD; ROOFING MATERIALS; CORRUGATED CARDBOARD AND MISCELLANEOUS PAPER; FERROUS AND NON-FERROUS METAL; NON-ASBESTOS BUILDING INSULATION; PLASTIC SCRAP; DIRT; CARPETS AND PADDING; GLASS (WINDOW AND DOOR); AND OTHER MISCELLANEOUS MATERIALS; BUT SHALL NOT INCLUDE OTHER SOLID WASTE TYPES."

ii. ANY WASTE BUILDING MATERIAL AND RUBBLE RESULTING FROM SUCH OPERATIONS THAT IS HAZARDOUS FOR PURPOSES OF N.J.A.C. 7:26G (THE HAZARDOUS WASTE RULES).

iii. DISCARDED (INCLUDING SPILLED) PESTICIDES, FERTILIZERS, FUELS, LUBRICANTS, PETROLEUM PRODUCTS, ANTI-FREEZE, PAINTS AND PAINT THINNERS, PAINT CHIPS AND SANDBLASTING GRITS, CLEANING SOLVENTS, ACIDS FOR CLEANING MASONRY SURFACES, DETERGENTS, CHEMICAL ADDITIVES USED FOR SOIL STABILIZATION (E.G., CALCIUM CHLORIDE), AND CONCRETE CURING COMPOUNDS.

iv. OTHER "LITTER," AS DEFINED AT N.J.S.A. 13:1E-215.D AS FOLLOWS: "ANY USED OR UNCONSUMED SUBSTANCE OR WASTE MATERIAL WHICH HAS BEEN DISCARDED WHETHER MADE OF ALUMINUM, GLASS, PLASTIC, RUBBER, PAPER, OR OTHER NATURAL OR SYNTHETIC MATERIAL, OR ANY COMBINATION THEREOF, INCLUDING, BUT NOT LIMITED TO, ANY BOTTLE, JAR OR CAN, OR ANY TOP, CAP OR DETACHABLE TAB OF ANY BOTTLE, JAR OR CAN, ANY UNLIGHTED CIGARETTE, CIGAR, MATCH OR ANY FLAMING OR GLOWING MATERIAL OR ANY GARBAGE, TRASH, REFUSE, DEBRIS, RUBBISH, GRASS CLIPPINGS OR OTHER LAWN OR GARDEN WASTE, NEWSPAPERS, MAGAZINES, GLASS, METAL, PLASTIC OR PAPER CONTAINERS OR OTHER PACKAGING OR CONSTRUCTION MATERIAL, BUT DOES NOT INCLUDE THE WASTE OF THE PRIMARY PROCESSES OF MINING OR OTHER EXTRACTION PROCESSES, LOGGING, SAWMILLING, FARMING OR MANUFACTURING."

v. SANITARY SEWAGE AND SEPTAGE.

vi. CONTAMINATED SOILS ENCOUNTERED OR DISCOVERED DURING EARTHMOVING ACTIVITIES OR DURING THE CLEANUP OF A LEAK OR DISCHARGE OF A HAZARDOUS SUBSTANCE.

B. CONCRETE WASHOUT - CONCRETE WASHOUT ONSITE IS PROHIBITED OUTSIDE DESIGNATED AREAS. WASHOUT ACTIVITIES INCLUDE, BUT NOT LIMITED TO, THE WASHING OF TRUCKS, CHUTES, HOSES, MIXERS, HOPPERS, AND TOOLS.

i. DESIGNATED WASHOUT AREAS SHALL BE LINED AND BERMED TO PREVENT DISCHARGES TO SURFACE AND GROUNDWATER.

ii. HARDENED CONCRETE FROM THE CONCRETE WASHOUT WASHOUT SHALL BE REMOVED AND PROPERLY DISPOSED OF.

iii. THE CONCRETE WASHOUT AREA SHALL BE CLEARLY DESIGNATED WITH A SIGN INDICATING THE AREAS USES.

C. SANITARY SEWAGE/SEPTAGE DISPOSAL - DISCHARGES OF RAW SANITARY SEWAGE OR SEPTAGE ONSITE ARE STRICTLY PROHIBITED. ADEQUATE FACILITIES WITH PROPER DISPOSAL SHALL BE PROVIDED AND MAINTAINED ONSITE OR ADJACENT TO THE SITE FOR ALL WORKERS AND OTHER SANITARY NEEDS.

4. SPILLS; DISCHARGES OF HAZARDOUS SUBSTANCES; FEDERALLY REPORTABLE RELEASES.

A. SPILL KITS SHALL BE AVAILABLE ONSITE OR ADJACENT TO THE SITE FOR ANY MATERIALS THAT ARE LISTED IN 2. ABOVE AND USED OR APPLIED ONSITE. ALL SPILLS OF SUCH MATERIAL SHALL BE CONTAINED AND CLEANED UP IMMEDIATELY. CLEANED UP MATERIALS SHALL BE PROPERLY DISPOSED OF.

B. DISCHARGES OF HAZARDOUS SUBSTANCES (AS DEFINED IN N.J.A.C. 7:1E-1.6) IN CONSTRUCTION SITE WASTES ARE SUBJECT TO THE PROVISIONS OF THE SPILL COMPENSATION AND CONTROL ACT, N.J.S.A. 58:10-23.11 ET SEQ., AND OF DEPARTMENT RULES FOR DISCHARGES OF PETROLEUM AND OTHER HAZARDOUS SUBSTANCES AT N.J.A.C. 7:1E. NO DISCHARGE OF HAZARDOUS SUBSTANCES RESULTING FROM AN ONSITE SPILL SHALL BE DEEMED TO BE "PURSUANT TO AND IN COMPLIANCE WITH [THIS] PERMIT" WITHIN THE MEANING OF THE SPILL COMPENSATION AND CONTROL ACT AT N.J.S.A. 58:10-23.11C.

C. RELEASES IN EXCESS OF REPORTABLE QUANTITIES (RQ) ESTABLISHED UNDER 40 C.F.R. 110, 117, AND 302 THAT OCCUR WITHIN A 24-HR PERIOD MUST BE REPORTED TO THE NATIONAL RESPONSE CENTER (800 424-8802).

SPPP REQUIRED INSPECTIONS AND REPORTS

MCNJ-SOIL-NOTE-1201 09/01/17

A COPY OF THE AUTHORIZATION SHALL BE POSTED ONSITE AT A SAFE, PUBLICLY ACCESSIBLE LOCATION IN CLOSE PROXIMITY OF THE CONSTRUCTION SITE AT ALL TIMES UNTIL A NOTICE OF COMPLETION HAS BEEN ISSUED. THE PERMITTEE SHALL POST THE NJDEP HOTLINE NUMBER (1-877-WARN-DEP) WITH THE COPY OF THE AUTHORIZATION.

I. ROUTINE INSPECTIONS

A. THE PERMITTEE SHALL CONDUCT AND DOCUMENT WEEKLY (MINIMUM) INSPECTIONS OF THE FACILITY TO IDENTIFY AREAS CONTRIBUTING TO THE STORMWATER DISCHARGE AUTHORIZED BY THIS PERMIT AND TO EVALUATE WHETHER THE STORMWATER POLLUTION PREVENTION PLAN (SPPP) IDENTIFIED UNDER E.1 OF THE CONSTRUCTION ACTIVITY STORMWATER (GP) PART I NARRATIVE REQUIREMENTS, INCLUDING THIS SOIL EROSION AND SEDIMENT CONTROL PLAN IS BEING PROPERLY IMPLEMENTED AND MAINTAINED, OR WHETHER ADDITIONAL MEASURES ARE NEEDED TO IMPLEMENT THE SPPP.

B. ONCE INSTALLATION OF ANY REQUIRED OR OPTIONAL EROSION CONTROL DEVICE OR MEASURE HAS BEEN IMPLEMENTED, ROUTINE INSPECTIONS, MINIMUM WEEKLY, OF EACH MEASURE SHALL BE PERFORMED BY THE CONTRACTOR'S INSPECTION PERSONNEL AND THE RESULTS RECORDED TO INVENTORY AND REPORT THE CONDITION OF EACH MEASURE TO ASSIST IN MAINTAINING THE EROSION AND SEDIMENT CONTROL MEASURES IN GOOD WORKING ORDER.

C. THESE REPORT FORMS SHALL BECOME AN INTEGRAL PART OF THE SPPP AND SHALL BE MADE READILY ACCESSIBLE TO GOVERNMENTAL INSPECTION OFFICIALS. THE OPERATOR'S ENGINEER, AND THE OPERATOR FOR REVIEW UPON REQUEST DURING VISITS TO THE PROJECT SITE. IN ADDITION, COPIES OF THE REPORTS SHALL BE PROVIDED TO ANY OF THESE PERSONS, UPON REQUEST, VIA MAIL OR FACSIMILE TRANSMISSION.

D. OTHER RECORD-KEEPING REQUIREMENTS

THE CONTRACTOR SHALL KEEP THE FOLLOWING RECORDS RELATED TO CONSTRUCTION ACTIVITIES AT THE SITE:

- DATES WHEN MAJOR GRADING ATIVITIES OCCUR AND THE AREAS WHICH WERE GRADED
- DATES AND DETAILS CONCERNING THE INSTALLATION OF STRUCTURAL CONTROLS
- DATES WHEN CONSTRUCTION ACTIVITIES CEASE IN AN AREA
- DATES WHEN AN AREAS IS STABILIZED, EITHER TEMPORARILY OR PERMANENTLY
- DATES OF RAINFALL AND THE AMOUNT OF RAINFALL
- DATES AND DESCRIPTIONS OF THE CHARACTER AND AMOUNT OF AN SPILLS OF HAZARDOUS MATERIALS
- RECORDS OF REPORTS FILED WITH REGULATORY AGENCIES IF REPORTABLE QUANTITIES OF HAZARDOUS MATERIALS SPILLED

2. STORMWATER POLLUTION PREVENTION PLAN (SPPP)

A. CONSTRUCTION ACTIVITY THAT MAY RESULT IN A STORMWATER DISCHARGE AUTHORIZED BY THIS PERMIT SHALL BE EXECUTED ONLY IN ACCORDANCE WITH A SPPP THAT CONSISTS OF THE CERTIFIED SOIL EROSION AND SEDIMENT CONTROL PLAN, AND (WHERE APPLICABLE) THE CONSTRUCTION SITE WASTE CONTROL COMPONENT OF SET FORTH IN ATTACHMENT B TO THE GENERAL PERMIT. A COPY OF THIS SPPP SHALL BE RETAINED BY THE PERMITTEE FOR A PERIOD OF AT LEAST FIVE (5) YEARS AFTER THE COMPLETION OF CONSTRUCTION. THIS PERIOD MAY BE EXTENDED BY WRITTEN REQUEST OF THE DEPARTMENT AT ANY TIME (SEE N.J.A.C. 7:14A-6.6):

3. REPORTS OF NONCOMPLIANCE

A. ALL INSTANCES OF NONCOMPLIANCE NOT REPORTED UNDER N.J.A.C. 7:14A-6.10 SHALL BE REPORTED TO THE DEPARTMENT ANNUALLY.

4. NOTIFICATION OF COMPLETION

A. THE SOIL CONSERVATION DISTRICT WILL PROVIDE THE DEPARTMENT A COPY OF THE REPORT OF COMPLIANCE ISSUED UNDER N.J.A.C. 2:90-1 FOR COMPLETED CONSTRUCTION ACTIVITIES EXCEPT SINGLE FAMILY HOME CONSTRUCTION UNDER B. BELOW. THE REPORT OF COMPLIANCE SHALL SERVE AS THE NOTIFICATION OF COMPLETION

B. THE BUILDER OF A SINGLE FAMILY HOME THAT IS AUTHORIZED UNDER THIS PERMIT, BUT NOT WITHIN THE DEFINITION OF "PROJECT AT N.J.S.A. 4:24-41G, SHALL SEND A COPY OF THE FINAL CERTIFICATE OF OCCUPANCY TO THE SOIL CONSERVATION DISTRICT. THE SOIL CONSERVATION DISTRICT WILL PROVIDE A COPY OF THE FINAL CERTIFICATE OF OCCUPANCY TO THE DEPARTMENT, WHICH WILL SERVE AS NOTIFICATION OF COMPLETION.

C. THE DOT SHALL PROVIDE WRITTEN NOTIFICATION TO THE DEPARTMENT WHEN DOT CERTIFIED PROJECTS ARE COMPLETED.

5. COPIES OF ALL OF THE ABOVE, INCLUDING THE SPPP (WITH THE CERTIFIED PLAN), THE CERTIFICATION, AUTHORIZATION UNDER NJPDES CONSTRUCTION ACTIVITY STORMWATER GENERAL PERMIT, ALL CORRESPONDENCE AND NOTES TO AND FROM THE NJDEP AND SOIL CONSERVATION DISTRICT (OR DESIGNATED MUNICIPALITY) SHALL BE MAINTAINED ON-SITE.

CONSTRUCTION SITE WASTE CONTROL COMPONENT OF THE STORMWATER POLLUTION PREVENTION PLAN (SPPP)

MCNJ-SOIL-NOTE-1200 07/01/17

I. THE CONSTRUCTION SITE WASTE CONTROL COMPONENT OF THE SPPP CONSISTS OF THE REQUIREMENTS IN 2., 3., AND 4. BELOW. THESE REQUIREMENTS BECAME OPERATIVE ON MARCH 3, 2004 AND APPLY TO CONSTRUCTION ACTIVITIES THAT COMMENCE ON OR AFTER MARCH 3, 2004. ANY NEW CONSTRUCTION ACTIVITY FOR WHICH AN RFA IS SUBMITTED ON OR AFTER MARCH 3, 2004 OR WHICH RECEIVE AUTOMATIC RENEWAL OF AUTHORIZATION UNDER THIS PERMIT AFTER MARCH 3, 2004 ALSO SHALL COMPLY WITH THESE REQUIREMENTS.

2. MATERIAL MANAGEMENT TO PREVENT OR REDUCE WASTE - ANY PESTICIDES, FERTILIZERS, FUELS, LUBRICANTS, PETROLEUM PRODUCTS, ANTI-FREEZE, PAINTS AND PAINT THINNERS, TOILET CLEANERS, SOLVENTS AND ACIDS, DETERGENTS, CHEMICAL ADDITIVES, AND CONCRETE CURING COMPOUNDS SHALL BE STORED IN CONTAINERS IN A DRY COVERED AREA. MANUFACTURERS' RECOMMENDED APPLICATION RATES, USES, AND METHODS SHALL BE STRICTLY FOLLOWED TO THE EXTENT NECESSARY TO

SOMEWHAT LIKE A DISC HARROW, ESPECIALLY DESIGNED TO PUSH OR CUT SOME OF THE BROADCAST LONG FIBER MULCH 3 TO 4 INCHES INTO THE SOIL SO AS TO ANCHOR IT AND LEAVE PART STANDING UPRIGHT. THIS TECHNIQUE IS LIMITED TO AREAS TRAVERSABLE BY A TRACTOR, WHICH MUST OPERATE ON THE CONTOUR OF SLOPES. STRAW MULCH RATE MUST BE 3 TONS PER ACRE. NO TACKIFYING OR ADHESIVE AGENT IS REQUIRED.

4. LIQUID MULCH-BINDERS - MAY BE USED TO ANCHOR SALT HAY, HAY OR STRAW MULCH.

a. APPLICATIONS SHOULD BE HEAVIER AT EDGES WHERE WIND MAY CATCH THE MULCH AND BLOW IT OFF, AND AT CREST OF BANKS. THE REMAINDER OF THE AREA SHOULD BE UNIFORM IN APPEARANCE.

b. USE ONE OF THE FOLLOWING:

1) ORGANIC AND VEGETABLE BASED BINDERS - NATURALLY OCCURRING, POWDER-BASED, HYDROPHILIC MATERIALS WHEN MIXED WITH WATER FORMULATES A GEL AND WHEN APPLIED TO MULCH UNDER SATISFACTORY CURING CONDITIONS WILL FORM MEMBRANED NETWORKS OF INSOLUBLE POLYMERS. THE VEGETABLE GEL SHALL BE PHYSIOLOGICALLY HARMLESS AND NOT RESULT IN A PHYTOTOXIC EFFECT OR IMPEDE GROWTH OF TURF GRASS. USE AT RATES AND WEATHER CONDITIONS AS RECOMMENDED BY THE MANUFACTURER TO ANCHOR MULCH MATERIALS. MANY NEW PRODUCTS ARE AVAILABLE, SOME OF WHICH MAY NEED FURTHER EVALUATION FOR USE IN THIS STATE.

2) SYNTHETIC BINDERS - HIGH POLYMER SYNTHETIC EMULSION, MISCIBLE WITH WATER WHEN DILUTED AND, FOLLOWING APPLICATION OF MULCH, DRYING AND CURING, SHALL NO LONGER BE SOLUBLE OR DISPERSIBLE IN WATER. BINDER SHALL BE APPLIED AT RATES RECOMMENDED BY THE MANUFACTURER AND REMAIN TACKY UNTIL GERMINATION OF GRASS.

NOTE:

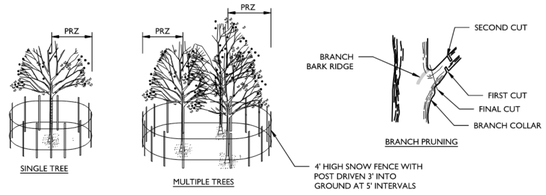

NOTES:

1. PROTECTIVE FENCING IS TO BE ERECTED PRIOR TO CONSTRUCTION AND MAINTAINED DURING CONSTRUCTION AS DIRECTED BY THE LANDSCAPE ARCHITECT, SOIL CONSERVATION DISTRICT AND/OR MUNICIPAL ENGINEER.
2. NO CONSTRUCTION ACTIVITY IS PERMITTED WITHIN THE PROTECTIVE FENCING.
3. AS CONSTRUCTION NEARS COMPLETION THE FENCING WILL BE REMOVED AS DIRECTED.
4. AT THE COMPLETION OF CONSTRUCTION, ALL TREES WILL BE PRUNED AS NECESSARY TO CORRECT ANY DAMAGE RESULTING FROM CONSTRUCTION ACTIVITY.
5. GENERAL MECHANICAL DAMAGE - SEE CRITICAL ROOT ZONE CALCULATION (CRZ) FOR CORRECT PLACEMENT OF TREE PROTECTION.
6. BOX TREES WITHIN 25 FEET OF A BUILDING SITE TO PREVENT MECHANICAL INJURY. FENCING OR OTHER BARRIER SHOULD BE INSTALLED BEYOND THE CRITICAL ROOT ZONE.
7. BOARDS WILL NOT BE NAILED TO TREES DURING BUILDING OPERATIONS.
8. FEEDER ROOTS SHOULD NOT BE CUT IN AN AREA INSIDE THE PROTECTED ROOT ZONE (PRZ) OR CRITICAL ROOT ZONE (CRZ). TREE ROOT SYSTEM COMMONLY EXTEND BEYOND THE DRIP LINE.
9. DAMAGED TRUNKS OR EXPOSED ROOTS SHOULD HAVE DAMAGED BARK REMOVED IMMEDIATELY AND NO PAINT SHALL BE APPLIED. EXPOSED ROOTS SHOULD BE COVERED WITH TOPSOIL IMMEDIATELY AFTER EXCAVATION IS COMPLETE. ROOTS SHALL BE PRUNED TO GIVE A CLEAN, SHARP SURFACE AMENABLE TO HEALING. ROOTS EXPOSED DURING HOT WEATHER SHOULD BE IRRIGATED TO PREVENT PERMANENT TREE INJURY. CARE FOR SERIOUS INJURY SHOULD BE PRESCRIBED BY A PROFESSIONAL FORESTER OR CERTIFIED TREE EXPERT.
10. TREE LIMB REMOVAL WHERE NECESSARY, WILL BE DONE AS NATURAL TARGET PRUNING TO REMOVE THE DESIRED BRANCH COLLAR. THERE SHOULD BE NO FLUSH CUTS. FLUSH CUTS DESTROY A MAJOR DEFENSE SYSTEM OF THE TREE. NO TREE PAINT SHALL BE APPLIED. ALL CUTS SHALL BE MADE AT THE OUTSIDE EDGE OF THE BRANCH COLLAR. CUTS MADE TOO FAR BEYOND THE BRANCH COLLAR MAY LEAD TO EXCESS SPROUTING, CRACKS AND ROT. REMOVAL OF A "V" CROTCH SHOULD BE CONSIDERED FOR FREE STANDING SPECIMEN TREES TO AVOID FUTURE SPLITTING DAMAGE.
11. CRITICAL ROOT ZONE (CRZ) OR PROTECTED ROOT ZONE (PRZ) CALCULATION:
    MEASURE DHB OF THE TREE (DIAMETER OF TREE IN BREAST HEIGHT OR 4.5' ABOVE GROUND ON THE UPHILL SIDE) IN INCHES.
    CRZ OR PRZ = DHB TIMES 1.5 (FOR OLD/UNHEALTHY/SENSITIVE TREES) OR DHB X 1.0 (FOR YOUNG/HEALTHY/TOLERANT TREES). EXPRESS IN FEET.

TEMPORARY TREE PROTECTION DETAIL

NOT TO SCALE — MCNJ-SOIL-EROS-2100 — 05/01/17

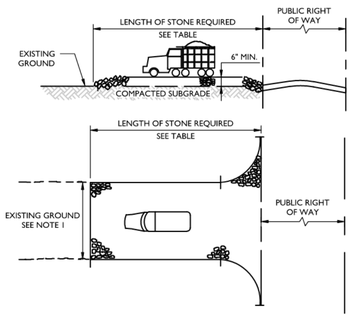

NOTES:

1. THE WIDTH OF CONSTRUCTION ENTRANCE SHALL NOT BE LESS THAN THE FULL WIDTH OF POINTS OF INGRESS OR EGRESS, OR AS SHOWN ON THE PLAN.
2. THICKNESS SHOWN IS FOR STONE CONSTRUCTION ENTRANCE ONLY.
3. THE ENTRANCE SHALL BE MAINTAINED IN A CONDITION WHICH WILL PREVENT TRACKING OR FLOWING OF SEDIMENT ONTO ROADWAYS.
4. THE ENTRANCE SHALL BE PERIODICALLY TOP DRESSED WITH ADDITIONAL STONE OR ADDITIONAL LENGTH AS ON-SITE CONDITIONS REQUIRE.
5. SPILLED, DROPPED, WASHED, OR TRACKED SEDIMENT ONTO ROADWAYS OR OTHER IMPERVIOUS SURFACES SHALL BE REMOVED IMMEDIATELY.
6. WHERE ACCUMULATION OF DUST AND SEDIMENT IS INADEQUATELY CLEANED OR REMOVED BY CONVENTIONAL METHODS, A POWER BROOM OR STREET SWEEPER SHALL BE USED TO CLEAN PAVED AREAS.
7. ALL OTHER ACCESS POINTS TO THE SITE WHICH DO NOT CONTAIN A CONSTRUCTION ACCESS PAD SHALL BE BLOCKED OFF.
8. STONE SIZE PER ASTM C-33, SIZE #2 (2 $\frac{1}{2}$" TO 1 $\frac{1}{2}$") OR #3 (2" TO 1") STONE.
9. INDIVIDUAL INTERIOR LOT INGRESS/EGRESS CONSTRUCTION ACCESS SHALL HAVE # 3 (1" TO 2") STONE, MINIMUM 10' (L) X 10' (W) AND 6" THICK.

PERCENT SLOPE OF ROADWAY	LENGTH OF STONE REQUIRED	
	COARSE GRAINED SOILS	FINE GRAINED SOILS
0% TO 2%	50 FT	100 FT
2% TO 5%	100 FT	200 FT
> 5%	ENTIRE SURFACE STABILIZED WITH HMA BASE COURSE, MIX I-2	

STABILIZED CONSTRUCTION ACCESS DETAIL

NOT TO SCALE — MCNJ-SOIL-EROS-1000 — 05/01/17

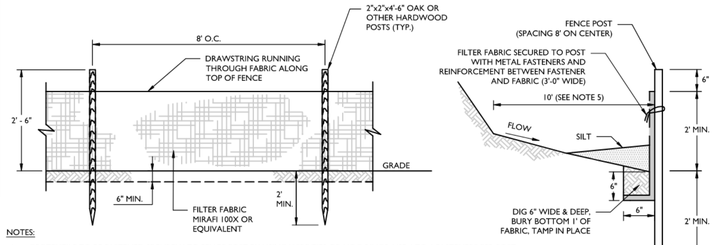

NOTES:

1. GEOTEXTILE TO BE FASTENED SECURELY TO FENCE POST BY USING WIRE TIES OR HOG RINGS. USE 4 TO 6 FASTENERS PER POST.
2. SPLICING OF INDIVIDUAL ROLLS SHALL NOT OCCUR AT LOW POINTS.
3. ALL SILT FENCE TO BE INSPECTED AND REMEDIAL MAINTENANCE PERFORMED BY THE CONTRACTOR WITHIN 24 HOURS AFTER EACH RAINFALL. REMOVE THE SILT ACCUMULATION WHEN IT REACHES 1/3 OF THE FENCE FABRIC HEIGHT.
4. FOR EVERY 100 FEET OF SILT FENCE, OR 1/4 ACRE OF DRAINAGE AREA, PROVIDE AN OVERFLOW POINT TO REDUCE PONDING IN FRONT OF THE FENCE.
5. IF SPACE PERMITTED, LOCATE SILT FENCE 10' AWAY FROM TOE OF SLOPE IF THE SLOPE IS STEEPER THAN 1:1.

SILT FENCE DETAIL

NOT TO SCALE — MCNJ-SOIL-EROS-1100 — 11/01/18

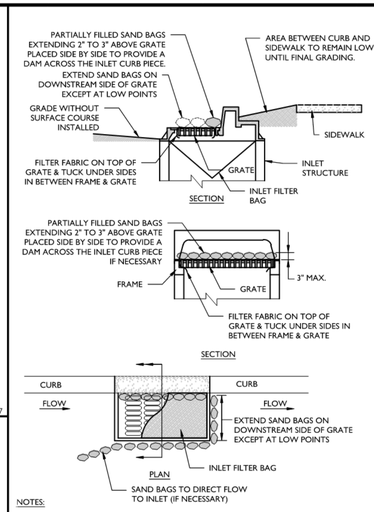

NOTES:

1. INLET FILTER BAG TO REMAIN UNTIL COMPLETION OF FINAL GRADING, PAVING AND ESTABLISHMENT OF COVER. PERIODICALLY CHECK AFTER EACH RAINFALL TO EXCAVATE AND REMOVE EXCESS SEDIMENT FROM AROUND INLETS.
2. FILTER FABRIC SHALL BE MIRAFI 140N OR APPROVED EQUIVALENT.

INLET PROTECTION (SAND BAG) DETAIL

NOT TO SCALE — MCNJ-SOIL-EROS-1501 — 05/01/17

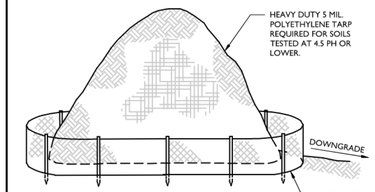

NOTES:

1. ALL STOCKPILES SHALL NOT TO BE LOCATED WITHIN 50 FEET OF A FLOODPLAIN, SLOPE, ROADWAY OR DRAINAGE FACILITY.

TOPSOIL STOCKPILE DETAIL

NOT TO SCALE — MCNJ-SOIL-EROS-2500 — 05/01/17

Colliers Engineering & Design

www.colliersengineering.com

Copyright © 2023. Colliers Engineering & Design All Rights Reserved. This drawing and all the information contained herein is authorized for use only by the party for whom the services were contracted or to whom it is certified. This drawing may not be copied, reused, disclosed, distributed or relied upon for any other purpose without the express written consent of Colliers Engineering & Design.

Doing Business as MASER CONSULTING

811 Know what's below. Call before you dig.

PROTECT YOURSELF
ALL STATES REQUIRE NOTIFICATION OF EXCAVATORS, DESIGNERS, OR ANY PERSON PREPARING TO DISTURB THE EARTH'S SURFACE ANYWHERE IN ANY STATE

FOR STATE SPECIFIC DIRECT PHONE NUMBERS VISIT: WWW.CALL811.COM

REV	DATE	DRAWN BY	DESCRIPTION

Digitally signed by Vincent Kelly
Date: 2023.04.28 12:24:14-04'00'

Vincent D. Kelly
NEW JERSEY LICENSED PROFESSIONAL ENGINEER
LICENSE NUMBER: GE55812
COLLIERS ENGINEERING & DESIGN, INC.
N.J. C.O.A. #: 24GA27986500

PRELIMINARY/FINAL MAJOR SITE PLAN

FOR

PRESTIGE COMMERCE CENTER

BLOCK 4.46, LOTS 1.04 & 1.07
BLOCK 4.461, LOT 1.07

TOWNSHIP OF NORTH BRUNSWICK
MIDDLESEX COUNTY
NEW JERSEY

Colliers Engineering & Design
HOLMDEL (Headquarters)
101 Crawfords Corner Road, Suite 3400
Holmdel, NJ 07733
Phone: 732.383.1950
COLLIERS ENGINEERING & DESIGN, INC.
DOING BUSINESS AS MASER CONSULTING

SCALE:	DATE:	DRAWN BY:	CHECKED BY:
AS SHOWN	04/27/2023	MB & PC	VDK

PROJECT NUMBER: 21000124A
DRAWING NAME: C-SESC

SHEET TITLE:
SOIL EROSION & SEDIMENT CONTROL DETAILS

SHEET NUMBER:
8 of 14

2021\21000124A\Engineering Drawings\Engineering\Site Plan\C-SESC.dwg\C-08 SOIL EROSION DETAILS By: PCRICHLOW

NOTE: DO NOT SCALE DRAWINGS FOR CONSTRUCTION.

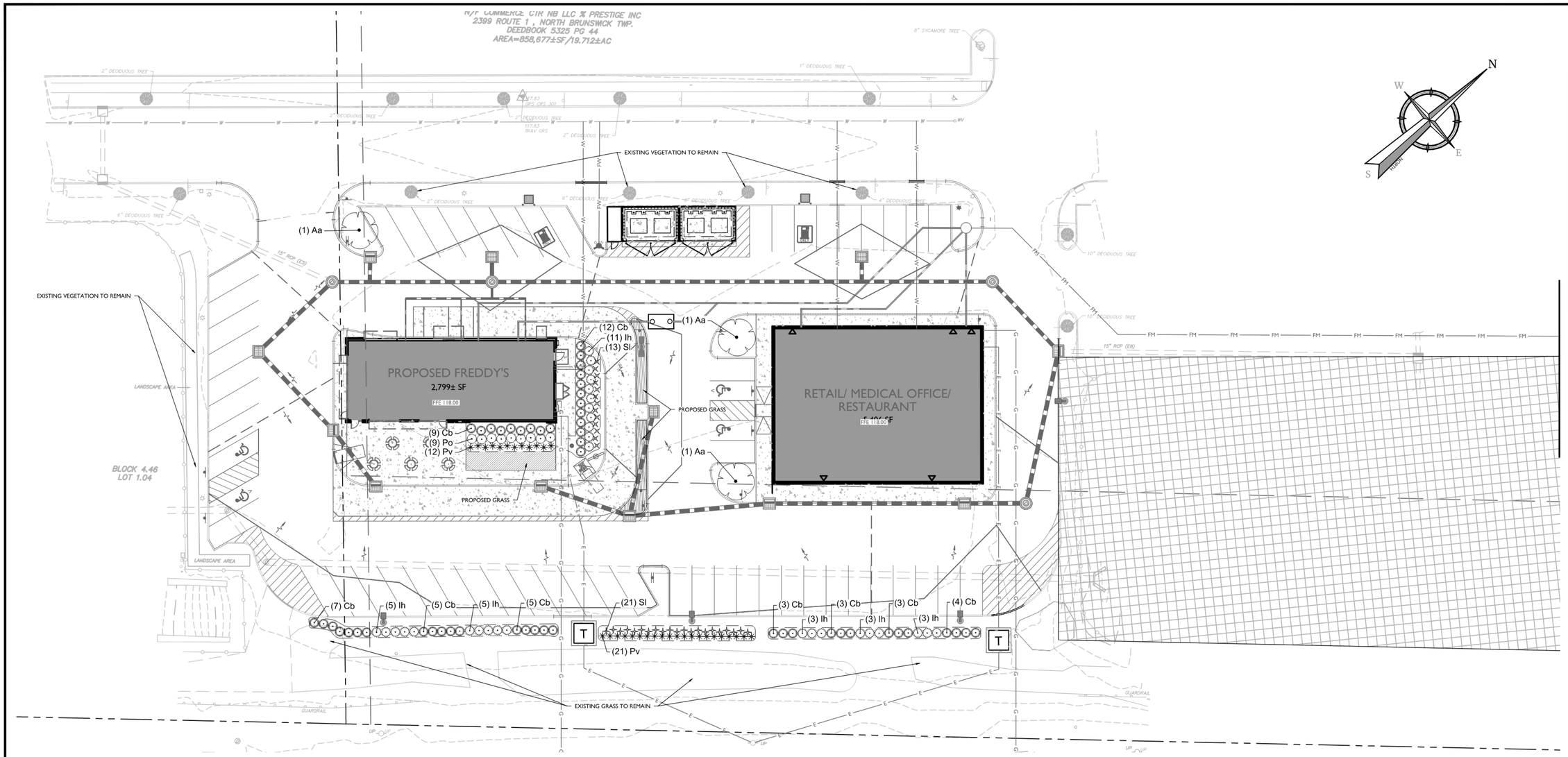

LANDSCAPE LEGEND

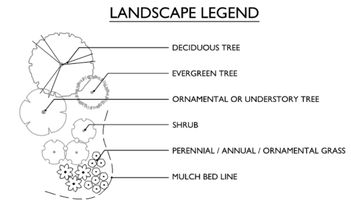

NOTES:
1. LANDSCAPE SYMBOLS ON THE PLAN VARY AND MAY DEVIATE FROM THE LANDSCAPE LEGEND SYMBOLS SHOWN ABOVE.

HATCH & SEED MIX KEY

LAWN MIX

GENERAL NOTES

1. THIS SHEET IS TO BE USED FOR LANDSCAPE PURPOSES ONLY.
2. REFER TO SHEET 1 FOR GENERAL NOTES.

LANDSCAPE PLAN NOTES

1. REFER TO SHEET 10 FOR GENERAL PLANTING NOTES AND LANDSCAPE DETAILS.
2. REFER TO THIS SHEET FOR PLANT SCHEDULES.
3. PLANT LOCATIONS INDICATED ON THE LANDSCAPE PLAN ARE APPROXIMATE; ACTUAL LOCATION OF PLANT MATERIAL IS SUBJECT TO SITE CONDITIONS.
4. THE LANDSCAPE PLAN SHALL TAKE PRECEDENCE OVER THE PLANT SCHEDULE SHOULD ANY PLANT MATERIAL DISCREPANCIES OCCUR.
5. LAWN AREAS SHALL BE STABILIZED WITH SEED UNLESS OTHERWISE INDICATED ON THE PLAN. REFER TO THE LAWN SEED MIX NOTES ON THE LANDSCAPE DETAILS SHEET AND THE SOIL EROSION AND SEDIMENT CONTROL PLAN FOR APPROVED SEED MIXTURES.
6. ALL SHADE TREES PLANTED ADJACENT TO PEDESTRIAN WALKWAYS, VEHICLE ACCESSES, OR WITHIN A SIGHT TRIANGLE OR SIGHT EASEMENT SHALL BE BRANCHED A MINIMUM OF 7'-00" ABOVE GRADE AND/OR APPROPRIATELY PRUNED TO BE 7'-00" ABOVE GRADE. ALL SHRUBS WITHIN A SIGHT TRIANGLE OR SIGHT EASEMENT SHALL NOT EXCEED 30" ABOVE THE ELEVATION OF THE ADJACENT CURB AND ARE TO BE APPROPRIATELY PRUNED.

20 0 20 40

SCALE : 1" = 20'

Colliers Engineering & Design

www.colliersengineering.com

Copyright © 2023. Colliers Engineering & Design All Rights Reserved. This drawing and all the information contained herein is authorized for use only by the party for whom the services were contracted or to whom it is certified. This drawing may not be copied, reused, disclosed, distributed or relied upon for any other purpose without the express written consent of Colliers Engineering & Design.

Doing Business as MASER CONSULTING

PROTECT YOURSELF
ALL STATES REQUIRE NOTIFICATION OF EXCAVATORS, DESIGNERS, OR ANY PERSON PREPARING TO DISTURB THE EARTH'S SURFACE ANYWHERE IN ANY STATE

811 Know what's below. Call before you dig.

FOR STATE SPECIFIC DIRECT PHONE NUMBERS VISIT: WWW.CALL811.COM

REV	DATE	DRAWN BY	DESCRIPTION

Digitally signed by Vincent Kelly
Date: 2023.04.28 12:24:17 -04'00'

Vincent D. Kelly
NEW JERSEY LICENSED PROFESSIONAL ENGINEER
LICENSE NUMBER: GE55812
COLLIERS ENGINEERING & DESIGN, INC.
N.J. C.O.A. #: 24GA27986500

PRELIMINARY/FINAL
MAJOR SITE PLAN

FOR

PRESTIGE COMMERCE CENTER

BLOCK 4.46, LOTS 1.04 & 1.07
BLOCK 4.461, LOT 1.07

TOWNSHIP OF NORTH BRUNSWICK
MIDDLESEX COUNTY
NEW JERSEY

Colliers Engineering & Design
HOLMDEL (Headquarters)
101 Crawfords Corner Road, Suite 3400
Holmdel, NJ 07733
Phone: 732.383.1950
COLLIERS ENGINEERING & DESIGN, INC.
DOING BUSINESS AS MASER CONSULTING

SCALE:	DATE:	DRAWN BY:	CHECKED BY:
AS SHOWN	04/27/2023	JL	VK

PROJECT NUMBER:	DRAWING NAME:
21000124A	C-LAND

SHEET TITLE:
LANDSCAPE PLAN

SHEET NUMBER:
09 of 14

NOTE: DO NOT SCALE DRAWINGS FOR CONSTRUCTION.

2021\21000124A\Engineering\Drawings\Engineering\Site Plans\C-LAND.dwg\C-09-LANDSCAPE By: KCRICHLOW

GENERAL PLANTING NOTES

LAND-GENL-PLNT-NOTE

MOD: 05/05/22
10/14/2021

A. GENERAL

1. THIS PLAN SHALL BE USED FOR LANDSCAPE PLANTING PURPOSES ONLY. EXAMINE ALL ENGINEERING DRAWINGS AND FIELD CONDITIONS FOR SPECIFIC LOCATIONS OF UTILITIES AND STRUCTURES. NOTIFY THE LANDSCAPE ARCHITECT OF ANY DISCREPANCIES OR LOCATION CONFLICTS PRIOR TO PLANTING INSTALLATION.

2. THE CONTRACTOR SHALL BE RESPONSIBLE FOR ALL UTILITIES MARKOUTS AND COMPLIANCE WITH ALL FEDERAL, STATE, OR LOCAL CODES, LAWFUL ORDERS OR REGULATIONS GOVERNING UPON THIS WORK.

3. OWNER OR HIS/HER REPRESENTATIVE SHALL BE NOTIFIED PRIOR TO BEGINNING PLANTING OPERATIONS.

B. PLANT MATERIAL

1. PLANT MATERIAL:

1.1. PLANT MATERIAL SHALL CONFORM WITH THE ANSI Z60.1-2014 'AMERICAN STANDARD FOR NURSERY STOCK' AS PUBLISHED BY AMERICANHORT IN REGARD TO QUALITY, SIZE OF PLANTING, SPREAD OF ROOTS, SIZE OF ROOTBALL, AND BRANCHING PATTERN.

1.2. PLANTS SHALL BE TYPICAL OF THEIR SPECIES AND VARIETY, HAVE NORMAL GROWTH HABITS, WELL DEVELOPED BRANCHES, DENSELY FOLIATED, VIGOROUS ROOT SYSTEMS, AND FREE FROM DEFECTS, INJURY, DISEASE, AND/OR INFESTATION, WITH ROOT BALLS INTACT.

1.3. ALL PLANT MATERIAL SHALL BEAR THE SAME RELATION TO FINISHED GRADE AT THE NURSERY. THE PLANT MATERIAL SHALL BE PLANTED AT THE SAME LEVEL WHEN PLANTED.

1.4. PLANT MATERIAL SHALL BE PLANTED ON THE DAY OF DELIVERY TO THE SITE. IN THE EVENT THIS IS NOT POSSIBLE, THE CONTRACTOR SHALL TAKE APPROPRIATE STEPS TO PROTECT THE PLANT MATERIAL FROM DAMAGE PRIOR TO INSTALLATION.

1.5. THE LANDSCAPE ARCHITECT OR OWNER SHALL HAVE THE RIGHT, AT ANY STAGE OF THE OPERATION, TO REJECT ANY AND ALL PLANT MATERIAL WHICH IN THEIR OPINION DOES NOT MEET THE REQUIREMENTS OF THESE PLANS.

2. PLANT QUANTITIES: THE LANDSCAPE PLAN SHOULD TAKE PRECEDENCE OVER THE PLANT SCHEDULE IF ANY PLANT DISCREPANCIES OCCUR.

3. PLANT SIZE: THE CONTRACTOR SHALL FURNISH PLANT MATERIAL IN THE CALIPER, HEIGHT, SIZE OR SPREAD INDICATED IN THE PLANT SCHEDULE.

4. SUBSTITUTIONS: NO PLANT SUBSTITUTIONS SHALL BE PERMITTED WITH REGARD TO SIZE, SPECIES, OR VARIETY WITHOUT WRITTEN PERMISSIONS OF THE MUNICIPALITY, LANDSCAPE ARCHITECT, OR OWNER. WRITTEN PROOF OF THE PLANT MATERIAL UNAVAILABILITY MUST BY DOCUMENTED BY THE CONTRACTOR.

5. GUARANTEE: PLANT MATERIAL SHALL BE GUARANTEED FOR **ONE (1) YEAR** AFTER THE DATE OF FINAL ACCEPTANCE. ANY PLANT MATERIAL THAT IS DEAD WITHIN THAT TIME PERIOD SHALL BE REMOVED, INCLUDING STUMP, AND REPLACED WITH A SIMILAR SIZE AND SPECIES AT THE EXPENSE OF THE CONTRACTOR WITHIN **ONE YEAR OR ONE** GROWING SEASON. TREE STAKES AND ARBOR TIES SHALL BE REMOVED AT THE END OF THE GUARANTEE PERIOD.

C. TOPSOIL REQUIREMENTS:

1. TOPSOIL REQUIREMENTS: SEE NJDOT SECTION 917 FOR REFERENCE AND SOIL ADDITIVES.

1.1. UNACCEPTABLE TOPSOIL SOURCES: DO NOT OBTAIN TOPSOIL FROM THE FOLLOWING SOURCES: AREAS CONTAINING CHEMICALLY CONTAMINATED SOILS. AREAS FROM WHICH THE ORIGINAL SURFACE HAS BEEN STRIPPED OR COVERED OVER, SUCH AS BORROW PITS, OPEN MINES, DEMOLITION SITES, DUMPS, LANDFILLS. NO TOPSOIL FROM WET EXCAVATION OR ACID PRODUCING SOILS.

1.2. TOPSOIL SHALL BE UNIFORM QUALITY, FREE FROM HARD CLODS, STIFF CLAY, HARD PAN, SODS, LARGE STONE, CEMENT, ASH, SLAG, CONCRETE, TAR, BOARDS, CHIPS, MULCH, OR ANY OTHER UNDESIRABLE MATERIALS. NO TOPSOIL SHALL BE DELIVERED IN A FROZEN OR MUDDY CONDITION.

1.3. TOPSOIL PH REQUIREMENTS ARE AS FOLLOWS: PH < 4.1 TOPSOIL IS UNACCEPTABLE. 4.1 ≤ PH < 5.8 ADD PULVERIZED LIME TO INCREASE THE PH TO 6.5 BEFORE USE. 5.8 ≤ PH < 7.0 TOPSOIL IS ACCEPTABLE. NO REMEDIATION NEEDED. 7.0 ≤ PH < 7.2 DECREASE PH TO AT LEAST 6.8 BEFORE USE. PH ≥ 7.2 TOPSOIL IS UNACCEPTABLE.

1.4. ORGANIC CONTENT. ENSURE THAT TOPSOIL HAS A MINIMUM ORGANIC CONTENT OF 2.75% BY WEIGHT. IF THE ORGANIC CONTENT IS LESS THAN 2.75%, INCREASE THE ORGANIC CONTENT BY ADDING SOIL ADDITIVES AT A RATE NECESSARY TO ATTAIN THE MINIMUM ORGANIC CONTENT. THE ORGANIC CONTENT SHALL NOT EXCEED 8% BY WEIGHT AND SHALL BE SAMPLED IN ACCORDANCE WITH THE ASSOCIATION OF AGRICULTURAL CHEMISTS.

1.5. GRADATION/PARTICLE SIZE. PROVIDE TOPSOIL CONFORMING TO THE PARTICLE SIZE REQUIREMENTS IN TABLE 917.01-2 AND THAT HAS NO MORE THAN 20 PERCENT RETAINED ON A NO. 10 SIEVE WHEN MECHANICALLY GRADED. THE DEPARTMENT WILL DETERMINE THE PARTICLE SIZE DISTRIBUTION FOR THE PORTION OF THE TOPSOIL PASSING THE NO. 10 SIEVE USING HYDROMETER ANALYSIS ACCORDING TO AASHTO T 88. SAND (2.0 MM TO 0.05 MM) 40 - 80% COMPOSITION. SILT (0.05 MM TO 0.005 MM) 0 - 30% COMPOSITION. CLAY (0.005 MM AND SMALLER) 10 - 30% COMPOSITION.

2. PREPARATION OF SUBGRADE:

2.1. HOLLOWS, DEPRESSIONS, AND GULLIES SHALL BE FILLED WITH ACCEPTABLE SANDY LOAM AS OUTLINED ABOVE OR SOIL AS DESCRIBED HEREON. SOIL TO BE ONE PART EACH OF TOPSOIL, MOISTENED PEAT MOSS, AND PARENT MATERIAL.

2.2. LOOSEN SUBSOIL BY SCARIFYING, RIPPING OR TILLING USING DISKS, HARROWS OR OTHER SUITABLE EQUIPMENT TO A DEPTH OF 4"-6" IMMEDIATELY BEFORE PLACING ANY TOPSOIL. REPEAT IN AREAS WHERE SEED OR PLANTINGS ARE PROPOSED AND THERE HAS BEEN COMPACTED SOIL.

3. TESTING AND APPROVAL OF SOILS:

3.1. THE CONTRACTOR SHALL SUBMIT A CERTIFIED REPORT SHOWING THE ANALYSIS OF REPRESENTATIVE SAMPLES OF TOPSOIL. TESTING SHALL BE PERFORMED BY RUTGERS COOPERATIVE RESEARCH & EXTENSION TESTING LABORATORIES OR EQUIVALENT AS APPROVED BY STATE AND LOCAL REGULATIONS. PRICE BID SHALL INCLUDE ALL INSPECTION AND LABORATORY FEES.

D. PLANTING PROCEDURES

1. PLANTING BEDS:

1.1. PROVIDE PLANTING PITS AS INDICATED ON PLANTING DETAILS. BACKFILL PLANTING PITS WITH SOILS AS OUTLINED IN SECTION C PRIOR. BACKFILL SOIL TO BE AT MINIMUM ONE PART EACH OF TOPSOIL, MOISTENED PEAT MOSS, AND PARENT MATERIAL.

1.2. PLANTING BEDS SHALL RECEIVE FOUR (4) INCHES OF DOUBLE SHREDDED HARDWOOD MULCH AND TREATED WITH A PRE-EMERGENT HERBICIDE. NO MULCH SHALL COME IN DIRECT CONTACT WITH ROOT FLARE/COLLAR; UNDER NO CIRCUMSTANCES SHALL THE ROOT CROWN BE BURIED.

1.3. SHRUB MASSES SHALL BE PLANTED IN CONTINUOUS MULCHED BEDS.

2. PLANT LOCATIONS: THE LOCATION OF ALL PLANT MATERIAL INDICATED ON THE LANDSCAPE PLANS ARE APPROXIMATE. THE FINAL LOCATION OF ALL PLANT MATERIAL AND PLANTING BEDLINES SHALL BE DETERMINED IN THE FIELD AT THE TIME OF INSTALLATION FOLLOWING THE BASIC INTENT OF THE APPROVED PLANS, UNLESS THERE IS A SPECIFIC DIMENSION OR LOCATION SHOWN.

3. PLANTING DATES: PLANTING OPERATIONS SHALL BE PERFORMED DURING PERIODS WITHIN THE PLANTING SEASON WHEN WEATHER AND SOIL CONDITIONS ARE SUITABLE AND IN ACCORDANCE WITH ACCEPTED LOCAL PRACTICES. PLANTING SEASONS ARE DEFINED AS MARCH 15 THROUGH MAY 15 AND SEPT 15 THROUGH NOV 15. PLANTING IS ACCEPTABLE DURING THE WINTER MONTHS IF WEATHER PERMITS AND THE GROUND IS NOT FROZEN, AND IN THE SUMMER IF SUPPLEMENTAL WATERING IS PROVIDED. SOIL MUST BE FROST FREE, FRIABLE, AND NOT MUDDY AT TIME OF PLANTING.

4. PLANTING METHODS:

4.1. TREES SHALL BE SUPPORTED IMMEDIATELY AFTER PLANTING. PLANT MATERIAL SHALL BE PROPERLY GUYED, STAKED, AND PLANTED IN CONFORMANCE WITH THE TYPICAL PLANTING DETAILS.

4.1.1. STAKES SHALL BE EIGHT TO TEN FEET LONG, OF SOUND, DURABLE UNFINISHED LUMBER CAPABLE OF WITHSTANDING ABOVEGROUND AND UNDERGROUND CONDITIONS DURING THE PERIOD OF GUARANTEE WITH TOP AND BOTTOM DIMENSIONS OF TWO INCHES BY TWO INCHES IN DIAMETER

4.1.2. THREE STAKES SHALL BE EQUALLY SPACED ABOUT THE TREE IN A TRIANGULAR FASHION AND SHALL BE DRIVEN VERTICALLY INTO THE GROUND 2 1/2 TO 3 FEET IN A MANNER THAT DOES NOT INJURE THE ROOT BALL.

4.1.3. TREES SHALL BE FASTENED TO EACH STAKE AT A HEIGHT OF FIVE FEET BY MEANS OF ARBOR TIE TREE TIE 1/16" WIDE RECOMMENDED FOR TREES UP TO 2 1/2 INCHES IN CALIPER).

4.2. SET PLANTS PLUMB AND STRAIGHT. SET AT SUCH LEVEL THAT AFTER SETTLEMENT A NORMAL OR NATURAL RELATIONSHIP TO THE CROWN OF THE PLANT WITH THE GROUND SURFACE WILL BE ESTABLISHED. LOCATE PLANTS IN CENTER OF PIT.

4.3. AT TIME OF INSTALLATION, THE CONTRACTOR SHALL WATER NEWLY INSTALLED PLANT MATERIAL. THE CONTRACTOR SHALL PROVIDE REGULAR WATERING TO ENSURE THE ESTABLISHMENT, GROWTH, AND SURVIVAL OF ALL PLANTS.

4.4. B&B PLANTS SHALL BE HANDLED FROM THE BOTTOM OF THE ROOTBALL ONLY. PLANTS WITH BROKEN, SPLIT, OR DAMAGED ROOTBALLS SHALL BE REJECTED.

4.5. CORD BINDING OF ALL B&B PLANTS SHALL BE CUT AND REMOVED, ALONG WITH THE BURLAP OF THE UPPER 1/3 OF THE ROOT BALL. ALL WIRE BASKETS ARE TO BE REMOVED PRIOR TO BACKFILLING PLANTING PIT.

E. MAINTENANCE

1. PRUNING:

1.1. EACH TREE AND SHRUB SHALL BE PRUNED IN ACCORDANCE WITH AMERICAN STANDARD FOR NURSERY STOCK TO PRESERVE THE NATURAL CHARACTER OF THE PLANT. ALL DEAD WOOD OR SUCKERS AND ALL BROKEN OR BADLY BRUISED BRANCHES SHALL BE REMOVED. PRUNING SHALL BE DONE WITH CLEAN, SHARP TOOLS.

1.2. SHADE TREES PLANTED NEAR PEDESTRIAN OR VEHICULAR ACCESS SHOULD NOT BE BRANCHED LOWER THAN 7'-0" ABOVE GRADE. PLANT MATERIAL LOCATED WITHIN SIGHT TRIANGLE EASEMENTS SHALL NOT EXCEED A MATURE HEIGHT OF 30" ABOVE THE ELEVATION OF THE ADJACENT CURB. STREET TREES PLANTED IN SIGHT TRIANGLE EASEMENTS SHALL BE PRUNED TO NOT TO HAVE BRANCHES BELOW 7'-0".

1.3. THE CENTRAL LEADER SHALL NOT BE CUT OR DAMAGED.

2. LAWN AREAS:

2.1. THE LANDSCAPE CONTRACTOR SHALL TEST THE SOIL TO CONFIRM SUITABILITY FOR THE PROPOSED SEED MIX AND SUPPLEMENT AS REQUIRED TO MEET THE REQUIRED PH & NUTRIENT LEVELS.

2.2. ALL DISTURBED AREAS SHALL BE STABILIZED WITH SEED UNLESS OTHERWISE INDICATED ON THE LANDSCAPE PLANS. SEED SHALL BE IN ACCORDANCE WITH THE LAWN SEED MIX NOTES AND THE SOIL EROSION AND SEDIMENT CONTROL DISTRICT'S SEED SPECIFICATIONS AS NOTED ON THE SOIL EROSION AND SEDIMENT CONTROL DETAILS SHEET.

2.3. SOD, IF SPECIFIED, SHALL CONSIST OF A STATE CERTIFIED MIXTURE. ALL DISTURBED AREAS INDICATED AS LAWN OR SOD SHALL BE TOPSOILED, LIMED, AND FERTILIZED & FINE GRADED PRIOR TO LAWN INSTALLATION.

3. EXISTING VEGETATION: EXISTING TREES AND SHRUBS TO BE PRESERVED ON SITE SHALL BE PROTECTED AGAINST CONSTRUCTION DAMAGE BY SNOW FENCING. FENCING SHALL BE PLACED OUTSIDE THE INDIVIDUAL TREE CANOPY. TREES TO REMAIN SHALL BE IDENTIFIED IN THE FIELD PRIOR TO COMMENCEMENT OF CONSTRUCTION. TREE PROTECTION FENCING SHALL BE INSTALLED PRIOR TO COMMENCEMENT OF CONSTRUCTION, GRADING, OR CLEARING. EXISTING VEGETATION BEING PRESERVED AND LOCATED AT THE EDGE OF THE NEW TREELINE SHALL BE PRUNED AND TRIMMED TO REMOVE ALL DEAD, DAMAGED, OR DISEASED BRANCHES.

4. SITE CLEANUP: PLANTING DEBRIS (WIRE, TWINE, RUBBERHOSE, BACKFILL, ETC.) SHALL BE REMOVED FROM THE SITE AFTER PLANTING IS COMPLETE. THE PROPERTY IS TO BE LEFT IN A NEAT, ORDERLY CONDITION IN ACCORDANCE WITH ACCEPTED PLANTING PRACTICES.

PLANT SCHEDULE PLANTING AREA

EVERGREEN TREES	QTY	BOTANICAL NAME	COMMON NAME	CONT	SIZE	HEIGHT
Jh	4	Juniperus chinensis 'Hetzii Columnaris'	Hetzi Column Juniper	B & B	6' - 7' Ht.	
FLOWERING TREES	**QTY**	**BOTANICAL NAME**	**COMMON NAME**	**CONT**	**SIZE**	**HEIGHT**
Aa	3	Amelanchier arborea	Downy Serviceberry	B & B	2 - 2 1/2" Cal.	12'-15'
DECIDUOUS SHRUBS	**QTY**	**BOTANICAL NAME**	**COMMON NAME**	**CONT**	**SIZE**	
Cb	19	Cornus sericea 'Budd's Yellow'	Budd's Yellow Twig Dogwood	5 gal	24-30" Spread	
EVERGREEN SHRUBS	**QTY**	**BOTANICAL NAME**	**COMMON NAME**	**CONT**	**SIZE**	
Ih	9	Ilex crenata 'Hetzi	Hetzii Japanese Holly	5 gal	18" - 24"	
Po	8	Prunus laurocerasus 'Otto Luyken'	Otto Luyken English Laurel	5 gal	24"-30"	
ORNAMENTAL GRASSES	**QTY**	**BOTANICAL NAME**	**COMMON NAME**	**CONT**	**SIZE**	
SI	11	Schizachyrium scoparium	Little Bluestem	2 gal		

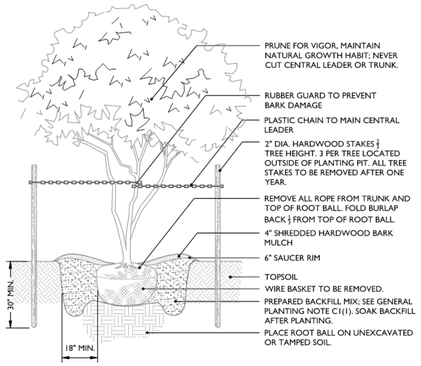

NOTES:

1. NO SOIL OR MULCH SHALL BE PLACED AGAINST ROOT COLLAR OF PLANT.
2. PLANTING DEPTH SHALL BE THE SAME OR HIGHER AS GROWN IN NURSERY.

MULTI-LEADER TREE PLANTING DETAIL

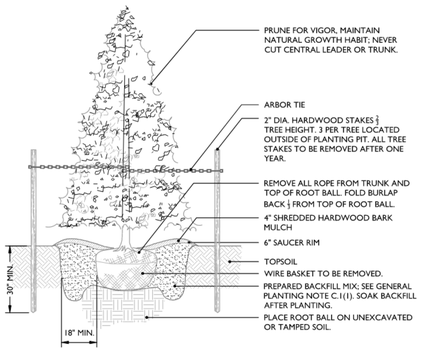

NOTES:

1. NO SOIL OR MULCH SHALL BE PLACED AGAINST ROOT COLLAR OF PLANT.
2. PLANTING DEPTH SHALL BE THE SAME OR HIGHER AS GROWN IN NURSERY.

EVERGREEN TREE PLANTING DETAIL

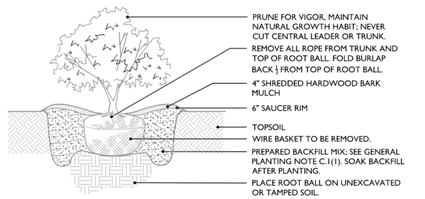

NOTES:

1. NO SOIL OR MULCH SHALL BE PLACED AGAINST ROOT COLLAR OF PLANT.
2. PLANTING DEPTH SHALL BE THE SAME OR HIGHER AS GROWN IN NURSERY.

SHRUB PLANTING DETAIL

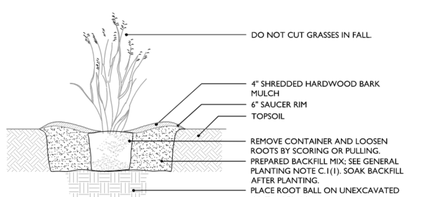

NOTES:

1. NO SOIL OR MULCH SHALL BE PLACED AGAINST ROOT COLLAR OF PLANT.
2. PLANTING DEPTH SHALL BE THE SAME OR HIGHER AS GROWN IN NURSERY.

ORNAMENTAL GRASS PLANTING DETAIL

LAWN SEED MIX NOTES

MIX #13 (WELL TO MODERATELY DRAINED SOIL):

HARD FESCUE AND/OR	
CHEWING FESCUE AND/OR	
STRONG CREEPING RED FESCUE	175 LBS/ACRE
PERENNIAL RYEGRASS	45 LBS/ACRE
KENTUCKY BLUE GRASS (BLEND)	45 LBS/ACRE

MIX #14 (EXCESSIVELY TO MODERATELY DRAINED SOIL):

TALL FESCUE	265 LBS/ACRE
KENTUCKY BLUE GRASS (BLEND)	20 LBS/ACRE
PERENNIAL RYE GRASS (BLEND)	20 LBS/ACRE

MIX #15 (WELL TO MODERATELY DRAINED SOIL):

HARD FESCUE	130 LBS/ACRE
CHEWING FESCUE	45 LBS/ACRE
STRONG CREEPING RED FESCUE	45 LBS/ACRE
PERENNIAL RYEGRASS	10 LBS/ACRE

MIX #16 (POORLY DRAINED SOIL)

ROUGH BLUEGRASS	90 LBS/ACRE
STRONG CREEPING RED FESCUE	130 LBS/ACRE

OPTIMUM SEEDING DATES:
8/1 - 10/1 (ZONE 5b, 6a); 8/15 - 10/15 (ZONE 6b); 8/15 - 10/30 (ZONE 7a, 7b)

SUMMER SEEDING DATES *:
6/1 - 7/31 (ZONE 5b, 6a); 5/1 - 8/14 (ZONE 6b, 7a, 7b)

ACCEPTABLE SEEDING DATES:
3/15 - 5/31 (ZONE 5b, 6a); 3/1 - 4/30 ZONE 6b); 2/1 - 4/30 (ZONE 7a, 7b)

* NOTE: SUMMER SEEDING SHOULD ONLY BE CONDUCTED WHEN THE SITE IS IRRIGATED. MIXES INCLUDING WHITE CLOVER REQUIRE THAT AT LEAST SIX WEEKS OF GROWING SEASON REMAIN AFTER SEEDING TO ENDURE ESTABLISHMENT BEFORE FREEZING CONDITIONS.

Colliers Engineering & Design
www.colliersengineering.com

Copyright © 2023. Colliers Engineering & Design All Rights Reserved. This drawing and all the information contained herein is authorized for use only by the party for whom the services were contracted or to whom it is certified. This drawing may not be copied, reused, disclosed, distributed or relied upon for any other purpose without the express written consent of Colliers Engineering & Design.

Doing Business as MASER CONSULTING

811 Know what's below. Call before you dig.

PROTECT YOURSELF
ALL STATES REQUIRE NOTIFICATION OF EXCAVATORS, DESIGNERS, OR ANY PERSON PREPARING TO DISTURB THE EARTH'S SURFACE ANYWHERE IN ANY STATE

FOR STATE SPECIFIC DIRECT PHONE NUMBERS
VISIT: WWW.CALL811.COM

REV	DATE	DRAWN BY	DESCRIPTION

Digitally signed by Vincent Kelly
Date: 2023.04.28 12:24:19-04'00'

Vincent D. Kelly
NEW JERSEY LICENSED PROFESSIONAL ENGINEER
LICENSE NUMBER: GE55812
COLLIERS ENGINEERING & DESIGN, INC.
N.J. C.O.A. #: 24GA27986500

PRELIMINARY/FINAL
MAJOR SITE PLAN

FOR

PRESTIGE
COMMERCE CENTER

BLOCK 4.46, LOTS 1.04 & 1.07
BLOCK 4.461, LOT 1.07

TOWNSHIP OF NORTH
BRUNSWICK
MIDDLESEX COUNTY
NEW JERSEY

Colliers Engineering & Design
HOLMDEL (Headquarters)
101 Crawfords Corner Road,
Suite 3400
Holmdel, NJ 07733
Phone: 732.383.1950
COLLIERS ENGINEERING & DESIGN, INC.
DOING BUSINESS AS MASER CONSULTING

SCALE:	DATE:	DRAWN BY:	CHECKED BY:
AS SHOWN	04/27/2023	MB & PC	VDK

PROJECT NUMBER: 21000124A
DRAWING NAME: C-LAND

SHEET TITLE:
LANDSCAPE DETAILS

SHEET NUMBER:

NOTE: DO NOT SCALE DRAWINGS FOR CONSTRUCTION.

2021210001244\Engineering Drawings\Engineering\Site Plans\C-LAND.dwg\C-10-LANDSCAPE By: PCRICHLOW

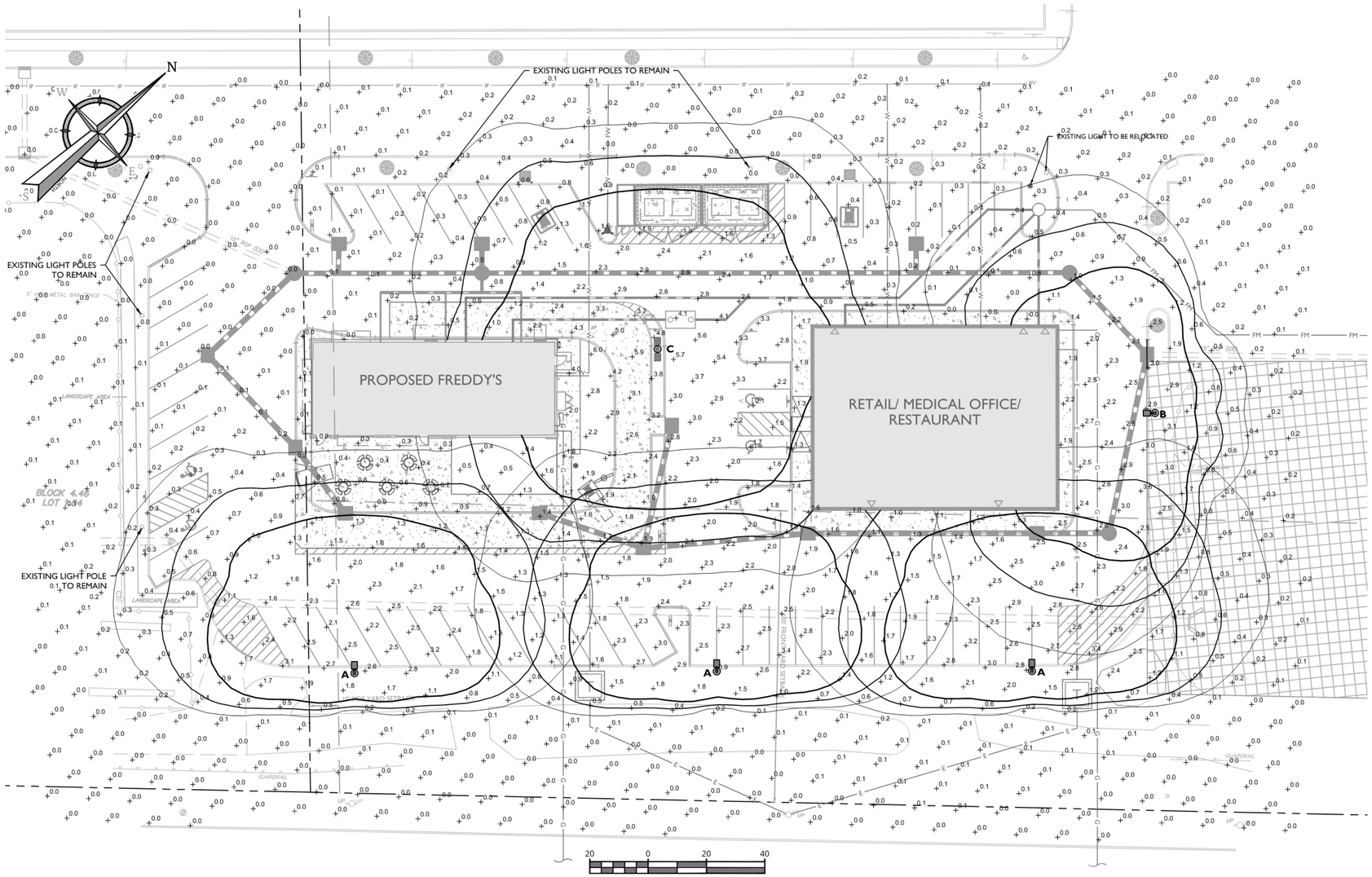

Lumark

DESCRIPTION

The Prevail LED area, site luminaire combines optical performance, energy efficiency and long term reliability in an advanced, patent pending modern design. Utilizing the latest LED technology, the Prevail luminaire delivers unparalleled uniformity resulting in greater pole spacing. A versatile mount standard arm facilitates ease of installation for both retrofit and new installations. With energy savings greater than 62%, the Prevail fixture replaces 150-400W metal halide fixtures in general area lighting applications such as parking lots, walkways, roadways and building areas.

Catalog #		Type	
Project			
Comments		Date	
Prepared by			

SPECIFICATION FEATURES

Construction
Construction is comprised of a heavy-duty, single-piece die-cast aluminum housing. The LED drivers are mounted in direct contact with the casting to promote low operating temperature and long life. The die-cast aluminum door is tethered to provide easy access to the driver if replacement is required. A one-piece silicone gasket seals the door to the fixture housing. The optics is mounted on a versatile, aluminum plate that dissipates heat from the LEDs resulting in longer life of the fixture. The fixture is IP66 and 3G vibration rated (ANSI C136.31) to insure strength of construction and longevity in the selected application.

Optics
Precision molded, high efficiency optics are precisely designed to shape the distribution, maximizing efficiency and application spacing. Available in Type II, III, IV and V distributions with lumen packages ranging from 6,100 to 18,900 nominal lumens. Light engine configurations consist of 1 or 2 high-efficacy LEDs mounted to metal-core circuit boards to maximize heat dissipation and promote long life (up to L80/60,000 hours at 25°C) per IESNA TM-21. For the ultimate level of spill light control, an optional house side shield accessory can be field or factory installed.

Electrical
LED drivers are mounted to the fixture for optimal heat sinking and ease of maintenance. Thermal management incorporates both conduction and convection to transfer heat rapidly away from the LED source for optimal efficiency and light output. Class 1 electronic drivers have a power factor >90%, THD <20%, and an expected life of 100,000 hours with <1% failure rate. Available in 120-277V 50/60Hz, 347V 60Hz or 480V 60Hz operation. 480V is compatible for use with 480Y Wye systems only. 10kV/10 kA surge protection standard. 0-10V dimming driver is standard with leads external to the fixture. Suitable for ambient temperatures from -40°C to 40°C. Optional 50°C HA (high ambient) available. Standard NEMA 3-PIN twistlock photocontrol receptacle and NEMA 7-PIN twistlock photocontrol receptacles are available as options.

Mounting
Standard pole mount arm is bolted directly to the pole and the fixture slides onto the arm and locks in place with a bolt facilitating quick and easy installation. The versatile, patented, standard mount arm accommodates multiple drill patterns ranging from 1-1/2" to 4-7/8". Removal of the door on the standard mounting arm enables wiring of the fixture without having to access the driver compartment. A knock-out on the standard mounting arm enables round pole mounting. Wall mount and mast arm mounting options are available. Mast arm adapter fits 2-3/8" O.D. tenon.

Finish
Housing and cast parts finished in five-stage super TGIC polyester powder coat paint, 2.5 mil nominal thickness for superior protection against fade and wear. Standard color is bronze. Additional colors available in white, grey, black, dark platinum and graphite metallic.

Warranty
Five-year warranty.

PRV PREVAIL

LED

AREA / SITE / ROADWAY LUMINAIRE

CERTIFICATION DATA
UL and cUL Wet Location Listed
IP66 Rated
3G Vibration Rated
DLC Listed
DesignLights Consortium® Qualified*
Dark Sky Approved (3000K CCT and warmer only)

ENERGY DATA
Electronic LED Driver
0.9 Power Factor
<20% Total Harmonic Distortion
120-277V/50 and 60Hz,
347V/60Hz, 480V/60Hz
-40°C Minimum Temperature Rating
+40°C Ambient Temperature Rating

EPA
Effective Projected Area (Sq. Ft.): 0.75

SHIPPING DATA
Approximate Net Weight:
20 lbs. (9.09 kgs.)

DIMENSIONS

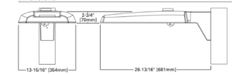

EATON
Powering Business Worldwide

*www.designlights.org

TD500018EN
November 28, 2018 12:10 PM

page 2

PRV PREVAIL

VERSATILE MOUNT SYSTEM

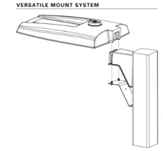

POLE MOUNT ARM

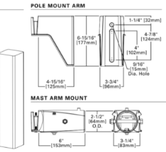

WALL MOUNT

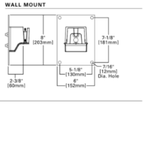

MAST ARM MOUNT

MOUNTING CONFIGURATIONS AND EPAS

Wall Mount	Arm Mount Single	Arm Mount 2 @ 180°	Arm Mount 2 @ 90°	Arm Mount 3 @ 90°	Arm Mount 4 @ 90°
	EPA 2.75	EPA 1.50	EPA 1.90	EPA 2.25	EPA 3.00

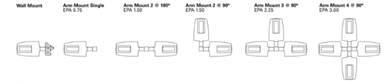

OPTICAL CONFIGURATIONS

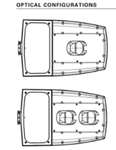

POWER AND LUMENS

Light Engine		A15	A25	A40	A60
Nominal Power (Watts)		57W	87W	142W	163W
Input Current @ 120V (A)		0.49	0.76	1.23	1.34
Input Current @ 277V (A)		0.22	0.35	0.54	0.60
Input Current @ 347V (A)		0.16	0.28	0.45	0.49
Input Current @ 480V (A)		0.13	0.21	0.33	0.35
Type II	Lumens	6,139	10,204	15,073	18,830
	BUG Rating	B1-U0-G1	B2-U0-G2	B3-U0-G3	B3-U0-G3
Type III	Lumens	6,192	10,292	15,203	18,992
	BUG Rating	B1-U0-G2	B2-U0-G3	B2-U0-G3	B3-U0-G4
Type IV	Lumens	6,173	10,261	15,157	18,935
	BUG Rating	B1-U0-G3	B2-U0-G3	B2-U0-G4	B2-U0-G5
Type V	Lumens	6,393	10,627	15,697	19,610
	BUG Rating	B3-U0-G3	B4-U0-G3	B4-U0-G4	B5-U0-G4

NOTE: Lumen output for standard bronze fixture color. Different housing colors impact lumen output. IES files for the non-standard colors are available upon request.

LUMEN MAINTENANCE

Ambient Temperature	25,000 Hours*	50,000 Hours*	60,000 Hours*	Theoretical 100,000 Hours	Theoretical L70 (Hours)*
25°C	> 96%	> 93%	> 92%	> 87%	> 240,000
40°C	> 96%	> 93%	> 92%	> 87%	> 206,000
50°C	> 95%	> 92%	> 91%	> 86%	> 250,000

* Per IESNA TM-21 data.

LUMEN MULTIPLIER

Ambient Temperature	Lumen Multiplier
10°C	1.02
15°C	1.01
25°C	1.00
40°C	0.99

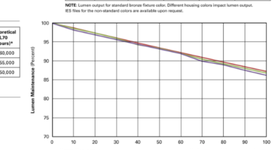

Eaton
1121 Highway 74 South
Peachtree City, GA 30269
P: 770-486-4800
www.eaton.com/lighting

Specifications and dimensions subject to change without notice.

EATON
Powering Business Worldwide

TD500018EN
November 28, 2018 12:10 PM

FIXTURES A-C

GENERAL NOTES

1. THIS SHEET IS TO BE USED FOR LIGHTING PURPOSES ONLY.
2. REFER TO SHEET 1 FOR GENERAL NOTES.

LIGHTING PLAN NOTES

1. REFER TO THIS SHEET FOR LIGHTING DETAILS AND ORDERING INFORMATION.
2. LIGHT LEVELS ON PLAN REPRESENT AVERAGE MAINTAINED FOOTCANDLE LEVELS AT FINISHED EXTERIOR GRADE.
3. ALL MOUNTING HEIGHTS ARE MEASURED FROM FINISHED EXTERIOR GRADE TO LIGHT SOURCE.
4. POLE LOCATIONS MAY VARY DUE TO SITE CONDITIONS. CONTRACTOR TO FIELD VERIFY POLE LOCATIONS PRIOR TO INSTALLATION TO ACCOMMODATE UTILITIES, PAVEMENTS, FENCES, ETC.
5. UNDERGROUND CONDUIT LOCATIONS SHALL BE COORDINATED WITH THE PROPOSED TREE LOCATIONS.
6. CONCRETE FOOTING FOR POLE MOUNTED LIGHTS TO BE DESIGNED BY OTHERS. FOOTING DETAIL TO BE SUBMITTED FOR APPROVAL PRIOR TO CONSTRUCTION.
7. ELECTRICAL WIRING DESIGN FOR SITE LIGHTING TO BE DESIGNED BY OTHERS.
8. SITE LIGHTING SUBSTITUTIONS WILL NOT BE PERMITTED UNLESS SUBSTITUTIONS ARE SUBMITTED AND APPROVED.
9. LUMINAIRES TO BE MANUFACTURED BY EATON OR APPROVED EQUAL.
10. LUMINAIRES AND POLE FINISHES TO BE BLACK.
11. PROPOSED LIGHTS SHALL BE EQUIPPED WITH SENSORS, TIMERS, OR THE MANUFACTURER CONTROL SYSTEM SO THE PROPOSED LIGHTS CAN BE DIMMED OR TURNED OFF AFTER OCCUPATION HOURS. ONLY SPECIFIC LIGHTING FOR SECURITY PURPOSES SHALL REMAIN ON AFTER OCCUPATION HOURS. SECURITY LIGHTING SHALL BE DETERMINED BY THE OWNER AND CONTRACTOR.

LIGHTING LEGEND

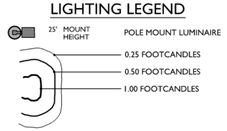

Schedule

Symbol	Label	Mounting Height	QTY	Manufacturer	Catalog Number	Description	Number Lamps	Filename	Lumens per Lamp	Lumen Multiplier	LLF	Wattage	Efficiency
	A	9' AT OMD 9'-8" AT OP	3	EATON - LUMARK (FORMER COOPER LIGHTING)	PRV-A60-D-UNV-T4-BZ-HSS	PREVAIL AREA AND ROADWAY LUMINAIRE (2) 70 CRI, 3000K LEDS, HIGH OUTPUT AND TYPE IV OPTICS WITH HOUSE SIDE SHIELD, BRONZE PAINTED FINISH	2	PRV-A60-D-UNV-T4-BZ-HSS.ies	8629	1	0.95	163	100%
	B	25'	1	EATON - LUMARK (FORMER COOPER LIGHTING)	PRV-A60-D-UNV-T4-BZ	PREVAIL AREA AND ROADWAY LUMINAIRE (2) 70 CRI, 3000K LEDS, HIGH OUTPUT AND TYPE IV OPTICS, BRONZE PAINTED FINISH	2	PRV-A60-D-UNV-T4-BZ.ies	9469	1	0.95	163	100%
	C	25'	1	EATON - LUMARK (FORMER COOPER LIGHTING)	PRV-A60-D-UNV-T4-BZ	PREVAIL AREA AND ROADWAY LUMINAIRE (2) 70 CRI, 3000K LEDS, HIGH OUTPUT AND TYPE IV OPTICS, BRONZE PAINTED FINISH	2	PRV-A60-D-UNV-T4-BZ.ies	9469	1	0.95	326	100%

Statistics

Description	Symbol	Avg	Max	Min	Max/Min	Avg/Min
Calc Zone #1	+	0.8 fc	6.0 fc	0.0 fc	N/A	N/A

Colliers Engineering & Design

www.colliersengineering.com

Copyright © 2023. Colliers Engineering & Design All Rights Reserved. This drawing and all the information contained herein is authorized for use only by the party for whom the services were contracted or to whom it is certified. This drawing may not be copied, reused, disclosed, distributed or relied upon for any other purpose without the express written consent of Colliers Engineering & Design.

Doing Business as MASER CONSULTING

811 Know what's below. Call before you dig.

PROTECT YOURSELF
ALL STATES REQUIRE NOTIFICATION OF EXCAVATORS, DESIGNERS, OR ANY PERSON PREPARING TO DISTURB THE EARTH'S SURFACE ANYWHERE IN ANY STATE

FOR STATE SPECIFIC DIRECT PHONE NUMBERS VISIT: WWW.CALL811.COM

REV	DATE	DRAWN BY	DESCRIPTION

Digitally signed by Vincent Kelly
Date: 2023.04.28 12:24:22-04'00'

Vincent D. Kelly
NEW JERSEY LICENSED PROFESSIONAL ENGINEER
LICENSE NUMBER: GE55812
COLLIERS ENGINEERING & DESIGN, INC.
N.J. C.O.A. #: 24GA27986500

PRELIMINARY/FINAL MAJOR SITE PLAN

FOR

PRESTIGE COMMERCE CENTER

BLOCK 4.46, LOTS 1.04 & 1.07
BLOCK 4.461, LOT 1.07

TOWNSHIP OF NORTH BRUNSWICK
MIDDLESEX COUNTY
NEW JERSEY

Colliers Engineering & Design
HOLMDEL (Headquarters)
101 Crawfords Corner Road, Suite 3400
Holmdel, NJ 07733
Phone: 732.383.1950
COLLIERS ENGINEERING & DESIGN, INC. DOING BUSINESS AS MASER CONSULTING

SCALE:	DATE:	DRAWN BY:	CHECKED BY:
AS SHOWN	04/27/2023	XXXXXX	XXXXXX
PROJECT NUMBER: 21000124A	DRAWING NAME: C-LGHT		

SHEET TITLE:
LIGHTING PLAN

SHEET NUMBER:
11 of 14

NOTE: DO NOT SCALE DRAWINGS FOR CONSTRUCTION.

2021\21000124A\Engineering\Drawings\Engineering\Site Plans\C-LGHT.dwg\C-11-LIGHTING By: KCBCALCW

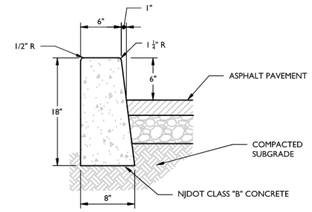

NOTES:

1. PREFORMED BITUMINOUS FIBER TRAVERSE JOINTS, 1/2" THICK AT 20' MAX. INTERVALS ALONG THE CURB.

CONCRETE CURB (ASPHALT PAVEMENT) DETAIL

NOT TO SCALE | MCNJ-SITE-CURB-1000 | 05/01/17

30" x 30"

COLORS:
LEGEND = WHITE (RETROREFLECTIVE)
CIRCLE BACKGROUND = RED (RETROREFLECTIVE)

R5-1 SIGN DETAIL

NOT TO SCALE | MCCM-SIGN-REGU-R5-1 | 12/01/20

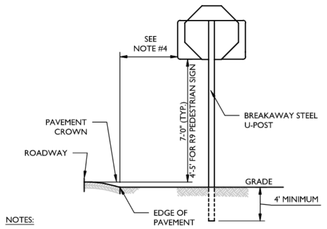

NOTES:

1. ALL POSTS SHALL BE OF ADEQUATE LENGTH TO MEET THE REQUIREMENTS FOR ERECTION, AS STATED IN THE CURRENT MANUAL ON "UNIFORM TRAFFIC CONTROL DEVICES" FOR STREETS AND HIGHWAYS.
2. ALL POSTS SHALL BE EMBEDDED 4' MINIMUM.
3. ALL POSTS TO BE BREAKAWAY STEEL U-POSTS IN CONFORMANCE WITH CURRENT ASTM SPECIFICATION A123 AND STANDARDS.
4. IN AREAS WITHOUT CURBING, THE OUTER EDGE OF SIGN TO BE 2'-0" MINIMUM TO 12'-0" MAXIMUM FROM EDGE OF CURB, AS DIRECTED.

SINGLE POST SIGN MOUNTING DETAIL

NOT TO SCALE | MCCM-SIGN-GENL-6100 | 07/01/19

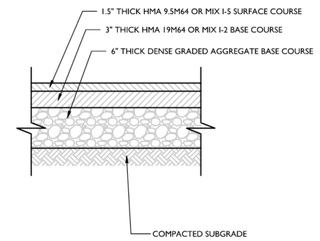

STANDARD ASPHALT PAVEMENT (RSIS) DETAIL

NOT TO SCALE | MCNJ-SITE-PVMT-1000 | 07/01/17

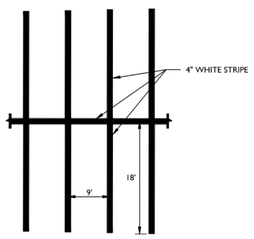

TYPICAL PARKING STALL DETAIL

NOT TO SCALE | MCNJ-SITE-MRKG-1000 | 05/01/17

30" x 30"

COLORS:
LEGEND = WHITE (RETROREFLECTIVE)
BACKGROUND = RED (RETROREFLECTIVE)

R1-1 SIGN DETAIL

NOT TO SCALE | MCCM-SIGN-REGU-R1-1 | 12/01/20

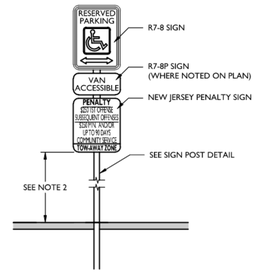

NOTES:

1. INSTALL SIGN WHERE NOTED ON PLAN.
2. THE BOTTOM OF THE LOWEST SIGN SHALL BE MOUNTED 60" ABOVE THE PARKING LOT OR SIDEWALK SURFACE WHEN THE SIGN IS PARALLEL TO THE SIDEWALK AND 72" ABOVE THE PARKING LOT OR SIDEWALK WHEN THE SIGN IS PERPENDICULAR TO THE SIDEWALK.

ACCESSIBLE PARKING SIGN DETAIL

NOT TO SCALE | MCCM-SIGN-GENL-6000 | 07/01/19

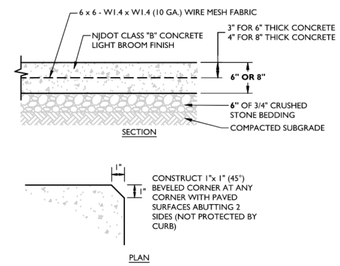

CONCRETE LOADING PAD DETAIL

NOT TO SCALE | MCNJ-SITE-PVMT-1800 | 10/01/18

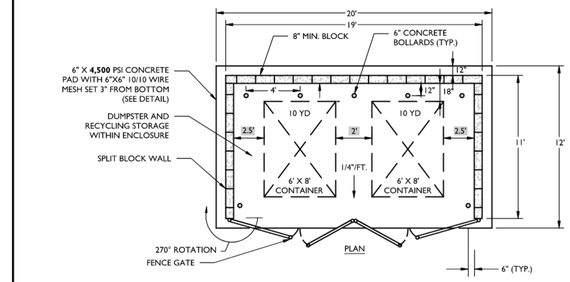

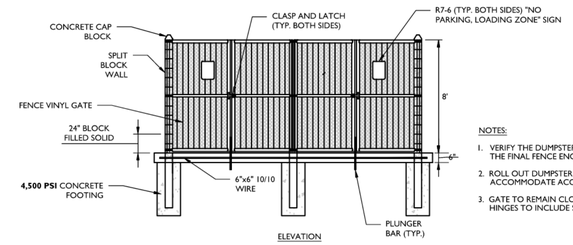

NOTES:

1. VERIFY THE DUMPSTER SIZE WITH TENANTS. ADJUST THE FINAL FENCE ENCLOSURE SIZE ACCORDINGLY.
2. ROLL OUT DUMPSTER OPENINGS ARE PROPOSED TO ACCOMMODATE ACCESS TO ALL DUMPSTERS.
3. GATE TO REMAIN CLOSED WHEN NOT IN USE. HINGES TO INCLUDE SELF-CLOSING MECHANISM.

REFUSE/RECYCLING ENCLOSURE (WITH DOUBLE GATE) DETAIL

NOT TO SCALE | MCCM-SITE-FNCE-2200 | 07/01/19

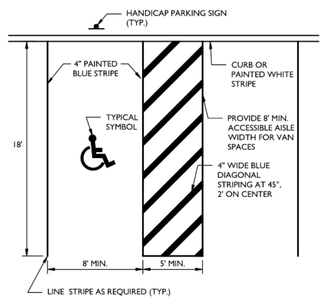

ACCESSIBLE PARKING LINE STRIPE STALL DETAIL

NOT TO SCALE | MCNJ-SITE-MRKG-1801 | 03/01/18

12" x 18"

COLORS:
LEGEND = GREEN (RETROREFLECTIVE)
HANDICAP SYMBOL= BLUE (RETROREFLECTIVE)
BACKGROUND = WHITE (RETROREFLECTIVE)

R7-8X SIGN DETAIL

NOT TO SCALE | MCCM-SIGN-REGU-R7-8 | 07/01/21

30" x 36"

COLORS:
LEGEND = BLACK
BACKGROUND = WHITE (RETROREFLECTIVE)

R3-5R SIGN DETAIL

NOT TO SCALE | MCCM-SIGN-REGU-R3-5 | 12/01/20

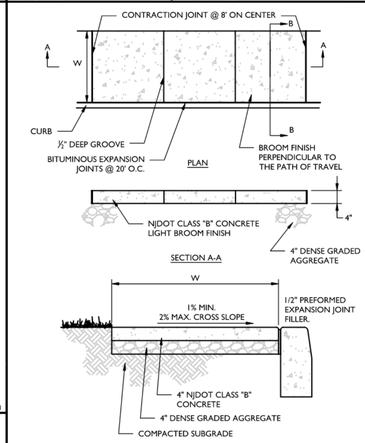

NOTES:

1. ½" EXPANSION JOINT FILLER INSTALLED BETWEEN THE CURB AND CONCRETE SIDEWALK AT 10' MAXIMUM SPACING. RECESS TO ¼" FROM THE TOP OF SIDEWALK.
2. ½" CONTRACTION JOINTS INSTALLED AT AN INTERVAL 24 TO 30 TIMES THE THICKNESS OF THE SLAB, TO A DEPTH OF ¼ OF THE THICKNESS OF THE SLAB. RECESS TO ¼" FROM THE TOP OF SIDEWALK, FOR THE FULL WIDTH OF THE SIDEWALK. SCORE A ¼" GROOVED JOINT HALF WAY BETWEEN THE CONTRACTION JOINTS.
3. JOINT FILLER SHALL CONFORM TO AASHTO M-33. SURFACE OF CONCRETE SHALL BE BROOM FINISH. ROUND EDGES USING AN EDGING TOOL WITH A ¼" RADIUS.
4. CONCRETE SIDEWALK SHALL BE CONSTRUCTED PER THE LATEST ADA REQUIREMENTS.

CONCRETE SIDEWALK (NEXT TO CURB) DETAIL

NOT TO SCALE | MCNJ-SITE-PVMT-2000 | 08/01/20

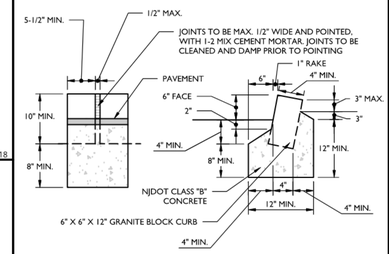

GRANITE BLOCK CURB (RSIS) DETAIL

NOT TO SCALE | MCNJ-SITE-CURB-1200 | 02/01/19

18" x 9"

COLORS:
LEGEND = GREEN (RETROREFLECTIVE)
BACKGROUND = WHITE (RETROREFLECTIVE)

R7-8P SIGN DETAIL

NOT TO SCALE | MCCM-SIGN-REGU-R7-8P | 07/01/21

36" x 12"

COLORS:
LEGEND = BLACK
BACKGROUND = BLACK
ARROW = WHITE (RETROREFLECTIVE)

R6-1R SIGN DETAIL

NOT TO SCALE | MCCM-SIGN-REGU-R6-1 | 12/01/20

30" x 36"

COLORS:
LEGEND = BLACK
BACKGROUND = WHITE (RETROREFLECTIVE)

R3-5L SIGN DETAIL

NOT TO SCALE | MCCM-SIGN-REGU-R3-5 | 12/01/20

Colliers Engineering & Design

www.colliersengineering.com

Copyright © 2023. Colliers Engineering & Design All Rights Reserved. This drawing and all the information contained herein is authorized for use only by the party for whom the services were contracted or to whom it is certified. This drawing may not be copied, reused, disclosed, distributed or relied upon for any other purpose without the express written consent of Colliers Engineering & Design.

Doing Business as MASER CONSULTING

811 Know what's below. Call before you dig.

PROTECT YOURSELF
ALL STATES REQUIRE NOTIFICATION OF EXCAVATORS, DESIGNERS, OR ANY PERSON PREPARING TO DISTURB THE EARTH'S SURFACE ANYWHERE IN ANY STATE

FOR STATE SPECIFIC DIRECT PHONE NUMBERS
VISIT: WWW.CALL811.COM

REV	DATE	DRAWN BY	DESCRIPTION

Digitally signed by Vincent Kelly
Date: 2023.04.28 12:24:25-04'00'

Vincent D. Kelly
NEW JERSEY LICENSED PROFESSIONAL ENGINEER
LICENSE NUMBER: GE55812
COLLIERS ENGINEERING & DESIGN, INC.
N.J. C.O.A. #: 24GA27986500

PRELIMINARY/FINAL
MAJOR SITE PLAN

FOR

PRESTIGE COMMERCE CENTER

BLOCK 4.46, LOTS 1.04 & 1.07
BLOCK 4.461, LOT 1.07

TOWNSHIP OF NORTH BRUNSWICK
MIDDLESEX COUNTY
NEW JERSEY

Colliers Engineering & Design
HOLMDEL (Headquarters)
101 Crawfords Corner Road,
Suite 3400
Holmdel, NJ 07733
Phone: 732.383.1950
COLLIERS ENGINEERING & DESIGN, INC.
DOING BUSINESS AS MASER CONSULTING

SCALE:	DATE:	DRAWN BY:	CHECKED BY:
AS SHOWN	04/27/2023	MB & PC	VDK

PROJECT NUMBER:	DRAWING NAME:
21000124A	C-DTLS

SHEET TITLE:
CONSTRUCTION DETAILS

SHEET NUMBER:
12 of 14

NOTE: DO NOT SCALE DRAWINGS FOR CONSTRUCTION.

2021210001 24A\Engineering\Drawings\Engineering\Site Plans\C-DTLS.dwg\C-12-DETAILS By: PCNICHALOW

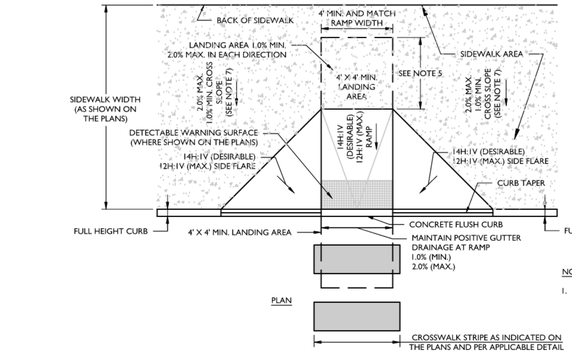

NOTE:

1. SEE CURB RAMP NOTES.

CURB RAMP TYPE 1 DETAIL

NOT TO SCALE MCNJ-SITE-HADA-1000 07/01/20

NOTES:

1. CONTRACTOR MUST PREPARE SHOP DRAWINGS OF EACH CURB RAMP FOR SUBMISSION AND APPROVAL OF THE UNDERSIGNED PROFESSIONAL AND THE MUNICIPAL, COUNTY, STATE OR OTHER AGENCY'S ENGINEER HAVING JURISDICTION. DEVIATIONS FROM THE CURB RAMP DETAILS REQUIRE WRITTEN APPROVAL OF THE UNDERSIGNED PROFESSIONAL AND THE MUNICIPAL, COUNTY, STATE OR OTHER AGENCY'S ENGINEER HAVING JURISDICTION.
2. ACCESSIBLE RAMPS:
   a. ON-SITE RAMP OR CURB RAMPS MUST BE INSTALLED IN CONFORMANCE WITH THE CURRENT ADA STANDARDS FOR ACCESSIBLE DESIGN AS PUBLISHED BY THE UNITED STATES DEPARTMENT OF JUSTICE AND MUST ALSO MEET OTHER APPLICABLE LOCAL AND STATE REQUIREMENTS IN EFFECT AT THE DATE OF CONSTRUCTION.
   b. PUBLIC RIGHT OF WAY ACCESSIBLE OR CURB RAMPS MUST BE INSTALLED PURSUANT WITH THE CURRENT UNITED STATES ACCESS BOARD "ACCESSIBILITY GUIDELINES FOR PEDESTRIAN FACILITIES IN THE PUBLIC RIGHT-OF-WAY" (PROWAG).
3. CURB RAMP SLOPE AS CONSTRUCTED IN THE DIRECTION OF TRAVEL CANNOT EXCEED 12H:1V. RAMP SLOPES OF 14H:1V ARE THE PREFERRED SLOPE TO MAINTAIN A LEVEL OF CONSTRUCTION TOLERANCE. MINIMUM CURB RAMP CROSS-SLOPE IS TO BE 0.50%, MAXIMUM CANNOT EXCEED 2.00%.
4. CURB RAMP SIDE FLARE SLOPES ARE TO BE 14H:1V DESIRABLE, 12H:1V MAXIMUM, BUT MAY BE 10H:1V UPON APPROVAL OF THE ENGINEER. WHERE SIDE FLARES ARE NOT REQUIRED, PROVIDE AN 18" CURB TAPER TO THE FLUSH CURB PER THE DETAIL.
5. LANDING AREA AT THE TOP AND BOTTOM OF THE CURB RAMP (AKA. CLEAR OR TURNING SPACE) MUST BE KEPT CLEAR OF OBSTRUCTIONS. THE LANDING AREA IS TO BE 4' X 4' MINIMUM AND MATCH THE WIDTH OF THE CURB RAMP. INCREASED THE DEPTH OF MINIMUM LANDING AREA TO 5 FEET IF CONSTRAINED AT THE BACK OF THE SIDEWALK.
6. THE LANDING AREA MUST HAVE AN ABSOLUTE MINIMUM SLOPE OF 0.5% AND A MAXIMUM SLOPE OF 2%, WHEREAS 1.0% TO 1.5% IS THE DESIRED DESIGN SLOPE IN THE DIRECTION OF TRAVEL AND FOR THE CROSS SLOPE.
7. SIDEWALK CROSS SLOPE MUST BE A MINIMUM OF 1% AND MAXIMUM 2%, WHEREAS 1.5% IS THE DESIRED DESIGN CROSS SLOPE. SIDEWALK BEYOND LANDING AREA MUST HAVE A MINIMUM 1% TO MAXIMUM 5% OF LONGITUDINAL SLOPE IN THE DIRECTION OF TRAVEL, AND A 1% TO 2% MAX. CROSS SLOPE.
8. FLUSH CURB AT CURB RAMP MUST BE MINIMUM 4' WIDE AND FLUSH WITH PAVEMENT. THE SEGMENT OF FLUSH CURB MUST BE MADE WITH CONCRETE CURB REGARDLESS OF THE CURB MATERIAL USED THROUGHOUT THE SITE.
9. GUTTER SLOPE THE ALONG CURB RAMP MUST MAINTAIN POSITIVE DRAINAGE WITH A 1.0 % TO 1.5% GUTTER SLOPE PREFERRED, WHEREAS 0.5% AS THE ABSOLUTE MINIMUM AND 2.0% IS MAXIMUM ALONG THE LENGTH OF THE FLUSH CURB.
10. CROSSWALKS AND PAVEMENT MARKINGS MUST BE INSTALLED AS DENOTED ON SITE PLAN. CURB RAMP MUST BE WHOLLY CONTAINED WITHIN THE CROSSWALK CROSSING.
11. THE RAMP SURFACE MUST HAVE A SLIP RESISTANT, BROOM FINISH PERPENDICULAR TO THE PATH OF TRAVEL.
12. CONCRETE EXPANSION JOINTS MUST HAVE A FIRM SURFACE WITH ¼" BEVELED CONCRETE EDGES. THE JOINT SURFACE SHALL NOT BE MORE THAN ¼" BELOW THE ADJOINING CONCRETE SURFACE.
13. DETECTABLE WARNING SURFACES ARE TO BE PROVIDED AT CURB RAMPS, BLENDED TRANSITION AT PEDESTRIAN STREET CROSSINGS AND PEDESTRIAN REFUGE ISLANDS WHEN THOSE ARE WITHIN THE PUBLIC RIGHT-OF-WAY, AND WHERE AS SHOWN ON THE PLANS.
14. SEE SEPARATE DETAILS FOR "DETECTABLE WARNING SURFACE" AND "CURB RAMP SECTIONS".

CURB RAMP NOTES

MOD: 04/27/23

NOT TO SCALE MCNJ-SITE-HADA-2500 07/01/20

NOTES:

1. INVERTS TO BE ELIMINATED IN BOTTOM OF TERMINAL INLETS, BOTTOMS SHALL BE DISHED AND SLOPED TOWARDS THE OUTLET PIPE AT A RATE OF GRADE OF 2 INCHES PER FOOT.
2. THIS INLET SHALL BE CONSTRUCTED OF CONCRETE OR PRECAST CONCRETE. IF CONCRETE BLOCK IS USED, THE BOTTOM SHALL BE AS SHOWN FOR CONCRETE & THE OUTSIDE OF THE WALLS SHALL BE PLASTERED WITH 1/2" COAT OF 1:2 CEMENT SAND MORTAR. THE INSIDE WALLS JOINTS SHALL BE STRUCK AND POINTED.
3. PROVIDE 7/8" DIA. X 7" X 12", 12" O.C. COPOLYMER POLYPROPYLENE PLASTIC STEPS WITH 1/2" DIA. GRADE 60 STEEL REINFORCEMENT, PS2-PF OR PS2-B WITH PRECAST PRESS FIT INSERTS, OR APPROVED EQUIVALENT.
4. INLET FRAME AND GRATES TO BE CAMPBELL FOUNDRY **# 2618** WITH **6"** OR **8"** TYPE **N** ECO CURB PIECE, OR APPROVED EQUAL.
5. WHEN DEPTH IS GREATER THAN 12' THE WALLS SHOULD BE 8" THICK CONCRETE OR SOLID CONCRETE BLOCK AND THE FOOTING SHALL BE EXTENDED TO 12" BEYOND THE OUTSIDE WALLS.
6. ALL CONCRETE TO BE NJDOT CLASS "B".
7. IN ACID SOILS, TWO COATS OF BITUMASTIC WATER PROOFING SHALL BE APPLIED PER MANUFACTURER'S SPECIFICATION.
8. INLETS SHALL BE CONSTRUCTED IN ACCORDANCE WITH H-20 LOADING REQUIREMENTS.

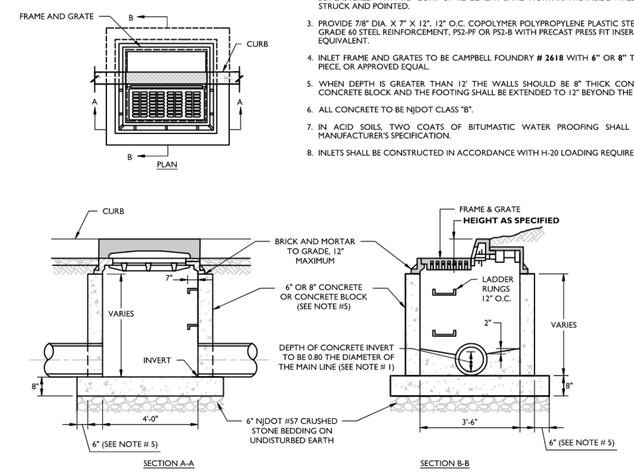

TYPE 'B' INLET DETAIL

NOT TO SCALE MCNJ-UTIL-STRM-1100 02/01/19

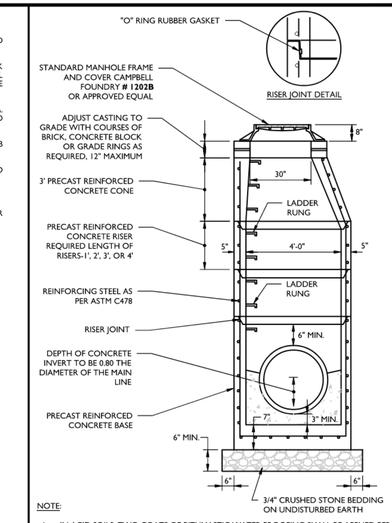

NOTE:

1. IN ACID SOILS, TWO COATS OF BITUMASTIC WATER PROOFING SHALL BE APPLIED PER MANUFACTURER'S SPECIFICATION.
2. ALL CONCRETE TO BE NJDOT CLASS "B".
3. MANHOLES SHALL BE CONSTRUCTED IN ACCORDANCE WITH HS-25 LOADING REQUIREMENTS.

PRECAST CONCRETE STORM MANHOLE 4' DIA. DETAIL

NOT TO SCALE MCNJ-UTIL-STRM-1600 07/01/21

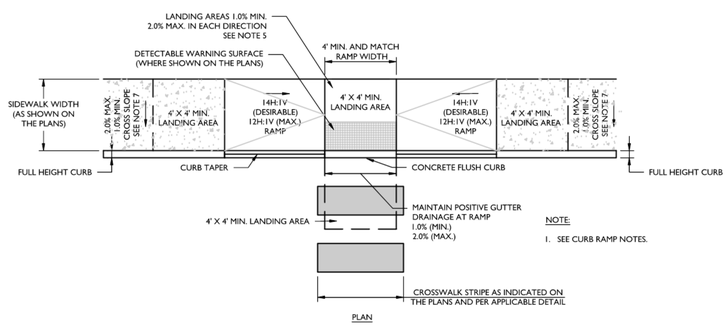

NOTE:

1. SEE CURB RAMP NOTES.

CURB RAMP TYPE 7 DETAIL

NOT TO SCALE MCNJ-SITE-HADA-1600 07/01/20

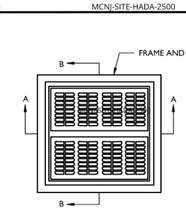

NOTES:

1. INVERTS TO BE ELIMINATED IN BOTTOM OF TERMINAL INLETS, BOTTOMS SHALL BE DISHED AND SLOPED TOWARDS THE OUTLET PIPE AT A RATE OF GRADE OF 2 INCHES PER FOOT.
2. THIS INLET SHALL BE CONSTRUCTED OF CONCRETE OR PRECAST CONCRETE. IF CONCRETE BLOCK IS USED, THE BOTTOM SHALL BE AS SHOWN FOR CONCRETE & THE OUTSIDE OF THE WALLS SHALL BE PLASTERED WITH 1/2" COAT OF 1:2 CEMENT SAND MORTAR. THE INSIDE WALLS JOINTS SHALL BE STRUCK AND POINTED.
3. PROVIDE 7/8" DIA. X 7" X 12", 12" O.C. COPOLYMER POLYPROPYLENE PLASTIC STEPS WITH 1/2" DIA. GRADE 60 STEEL REINFORCEMENT, PS2-PF OR PS2-B WITH PRECAST PRESS FIT INSERTS, OR APPROVED EQUIVALENT.
4. INLET FRAME AND GRATES TO BE CAMPBELL FOUNDRY PATTERN **# 3425** OR APPROVED EQUAL.
5. WHEN DEPTH IS GREATER THEN 12' THE WALLS SHOULD BE EITHER 8" THICK CONCRETE OR 8" SOLID CONCRETE BLOCK AND THE FOOTING SHALL BE EXTENDED TO 12" BEYOND THE OUTSIDE WALLS.
6. ALL CONCRETE TO BE NJDOT CLASS "B"
7. IN ACID SOILS, TWO COATS OF BITUMASTIC WATER PROOFING SHALL BE APPLIED PER MANUFACTURER'S SPECIFICATION.
8. INLETS SHALL BE CONSTRUCTED IN ACCORDANCE WITH H-20 LOADING REQUIREMENTS.

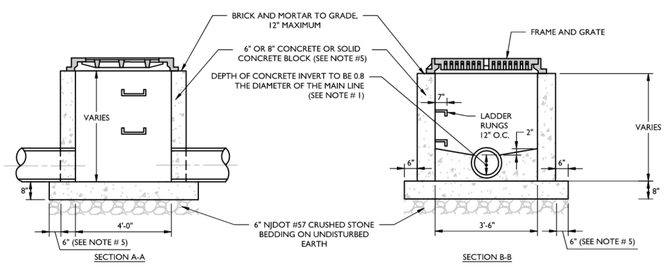

TYPE "E" INLET DETAIL

NOT TO SCALE MCNJ-UTIL-STRM-1200 02/01/19

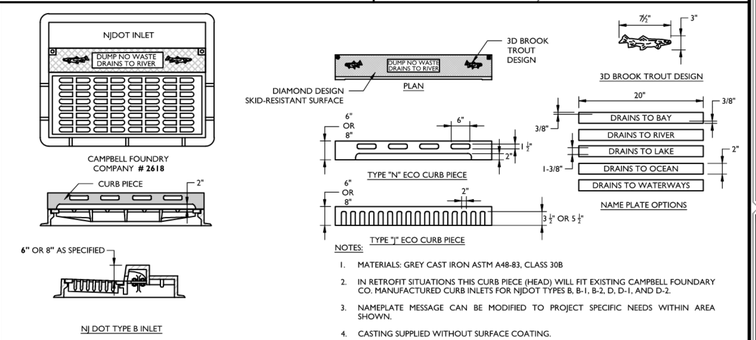

NOTES:

1. MATERIALS: GREY CAST IRON ASTM A48-83, CLASS 30B
2. IN RETROFIT SITUATIONS THIS CURB PIECE (HEAD) WILL FIT EXISTING CAMPBELL FOUNDARY CO. MANUFACTURED CURB INLETS FOR NJDOT TYPES B, B-1, B-2, D, D-1, AND D-2.
3. NAMEPLATE MESSAGE CAN BE MODIFIED TO PROJECT SPECIFIC NEEDS WITHIN AREA SHOWN.
4. CASTING SUPPLIED WITHOUT SURFACE COATING.
5. TYPE "N" OR "J" ECO CURB PIECE PER LOCAL REQUIREMENTS.

ECO CURB PIECE DETAIL

NOT TO SCALE MCNJ-UTIL-STRM-2001 05/01/17

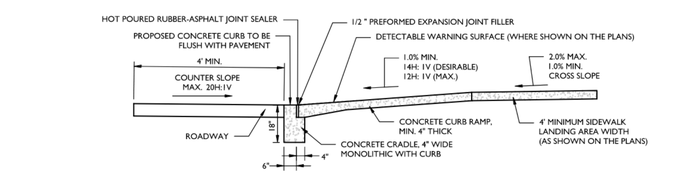

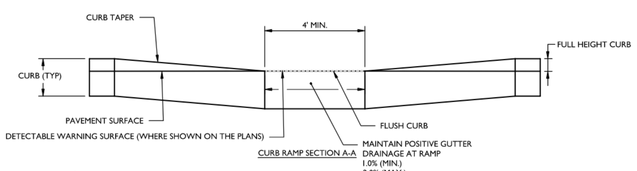

NOTES:

1. FLUSH CURB AT DETECTABLE WARNING SURFACE (WHERE SHOWN ON PLAN) IS TO BE A SMOOTH LEVEL SURFACE THAT IS FLUSH WITH THE ADJOINING PAVEMENT. NO BUMPS OR ROUGH SURFACE ARE ALLOWED. SUCH UNEVENNESS MUST BE MILLED OR GRINDED SMOOTH.
2. CURB TO BE FLUSH WITH ROADWAY PAVEMENT AND CONSTRUCTED WITH CONCRETE REGARDLESS OF THE CURB MATERIAL WHERE AS 1.0% USED THROUGHOUT THE SITE.
3. POSITIVE DRAINAGE IS TO BE MAINTAINED AT RAMP. RAMP IS TO SLOPE TOWARDS PAVEMENT NO PONDING OF WATER IS PERMITTED AT CURB RAMP. PAVEMENT GRADES TO BE ADJUSTED AS NECESSARY TO PROVIDE POSITIVE GUTTER DRAINAGE.
4. AS CONSTRUCTED GUTTER DRAINAGE GRADE ALONG FLUSH CURB AND WITHIN THE CROSSWALK AREA TO BE 1.0% MINIMUM, 2.00% MAXIMUM, WHERE AS 0.5% ABSOLUTE MINIMUM IF DUE TO SITE CONSTRAINTS.
5. DEVIATION FROM THIS DETAIL REQUIRES THE WRITTEN APPROVAL OF THE UNDERSIGNED PROFESSIONAL.

CURB RAMP SECTIONS DETAIL

NOT TO SCALE MCNJ-SITE-HADA-2000 07/01/20

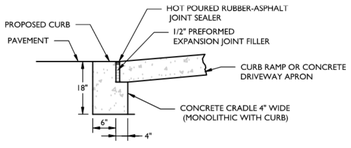

FLUSH CURB AND CRADLE DETAIL

MOD: 04/27/23

NOT TO SCALE MCNJ-SITE-HADA-2300 05/01/17

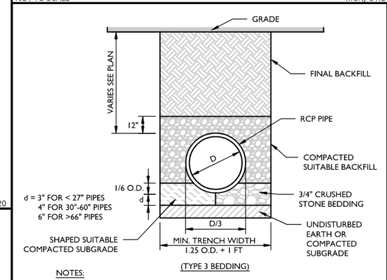

NOTES:

1. ALL REINFORCED CONCRETE PIPE AND BACKFILL SHALL BE INSTALLED IN ACCORDANCE WITH ASTM C1479.
2. REINFORCED CONCRETE PIPE (RCP) SHALL BE CLASS III CIRCULAR PIPE UNLESS OTHERWISE SPECIFIED, CONFORM TO ASTM C76 AND AASHTO M170.
3. SUITABLE BEDDING SHALL BE SAND, GRAVEL OR CRUSHED STONE.

RCP PIPE BEDDING DETAIL

NOT TO SCALE MCNJ-UTIL-STRM-2301 02/01/19

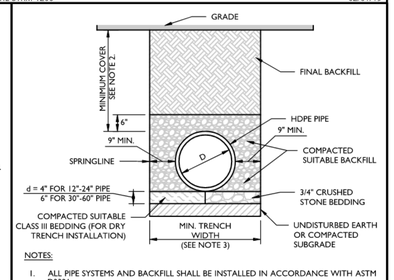

NOTES:

1. ALL PIPE SYSTEMS AND BACKFILL SHALL BE INSTALLED IN ACCORDANCE WITH ASTM D2321.
2. MINIMUM COVER FOR HDPE PIPES IS 12" UP TO 48" DIAMETER PIPE AND 24" OF COVER FOR UP TO 60" DIAMETER PIPE. PIPE COVER IS MEASURED FROM TOP OF PIPE TO THE BOTTOM OF FLEXIBLE PAVEMENT, OR TO THE TOP OF RIGID PAVEMENT, OR TO THE GROUND SURFACE.
3. MINIMUM TRENCH WIDTH PER MANUFACTURER'S RECOMMENDATIONS.

HDPE STORM PIPE BEDDING DETAIL

NOT TO SCALE MCNJ-UTIL-STRM-2302 05/01/17

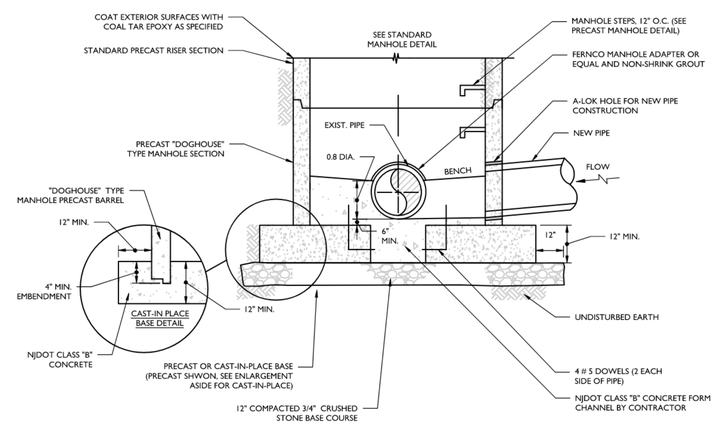

DOGHOUSE MANHOLE DETAIL

NOT TO SCALE MCNJ-UTIL-SSWR-1100 05/01/17

Colliers Engineering & Design

www.colliersengineering.com

Copyright © 2023. Colliers Engineering & Design All Rights Reserved. This drawing and all the information contained herein is authorized for use only by the party for whom the services were contracted or to whom it is certified. This drawing may not be copied, reused, disclosed, distributed or relied upon for any other purpose without the express written consent of Colliers Engineering & Design.

Doing Business as MASER CONSULTING

PROTECT YOURSELF
ALL STATES REQUIRE NOTIFICATION OF EXCAVATORS, DESIGNERS, OR ANY PERSON PREPARING TO DISTURB THE EARTH'S SURFACE ANYWHERE IN ANY STATE
Know what's below. Call before you dig.
FOR STATE SPECIFIC DIRECT PHONE NUMBERS VISIT: WWW.CALL811.COM

REV	DATE	DRAWN BY	DESCRIPTION

Digitally signed by Vincent Kelly
Date: 2023.04.28 12:24:27 -04'00'

Vincent D. Kelly
NEW JERSEY LICENSED PROFESSIONAL ENGINEER
LICENSE NUMBER: GE55812
COLLIERS ENGINEERING & DESIGN, INC.
N.J. C.O.A. #: 24GA27986500

PRELIMINARY/FINAL MAJOR SITE PLAN

FOR

PRESTIGE COMMERCE CENTER

BLOCK 4.46, LOTS 1.04 & 1.07
BLOCK 4.461, LOT 1.07

TOWNSHIP OF NORTH BRUNSWICK
MIDDLESEX COUNTY
NEW JERSEY

Colliers Engineering & Design
HOLMDEL (Headquarters)
101 Crawfords Corner Road, Suite 3400
Holmdel, NJ 07733
Phone: 732.383.1950
COLLIERS ENGINEERING & DESIGN, INC.
DOING BUSINESS AS MASER CONSULTING

SCALE:	DATE:	DRAWN BY:	CHECKED BY:
AS SHOWN	04/27/2023	MB & PC	VDK

PROJECT NUMBER: 21000124A
DRAWING NAME: C-DTLS

SHEET TITLE: CONSTRUCTION DETAILS

SHEET NUMBER: 13 of 14

NOTE: DO NOT SCALE DRAWINGS FOR CONSTRUCTION.

2021210001\24A\Engineering\Drawings\Engineering\Site Plans\C-DTLS.dwg\C-13-DETAILS By: PCRICHLOW

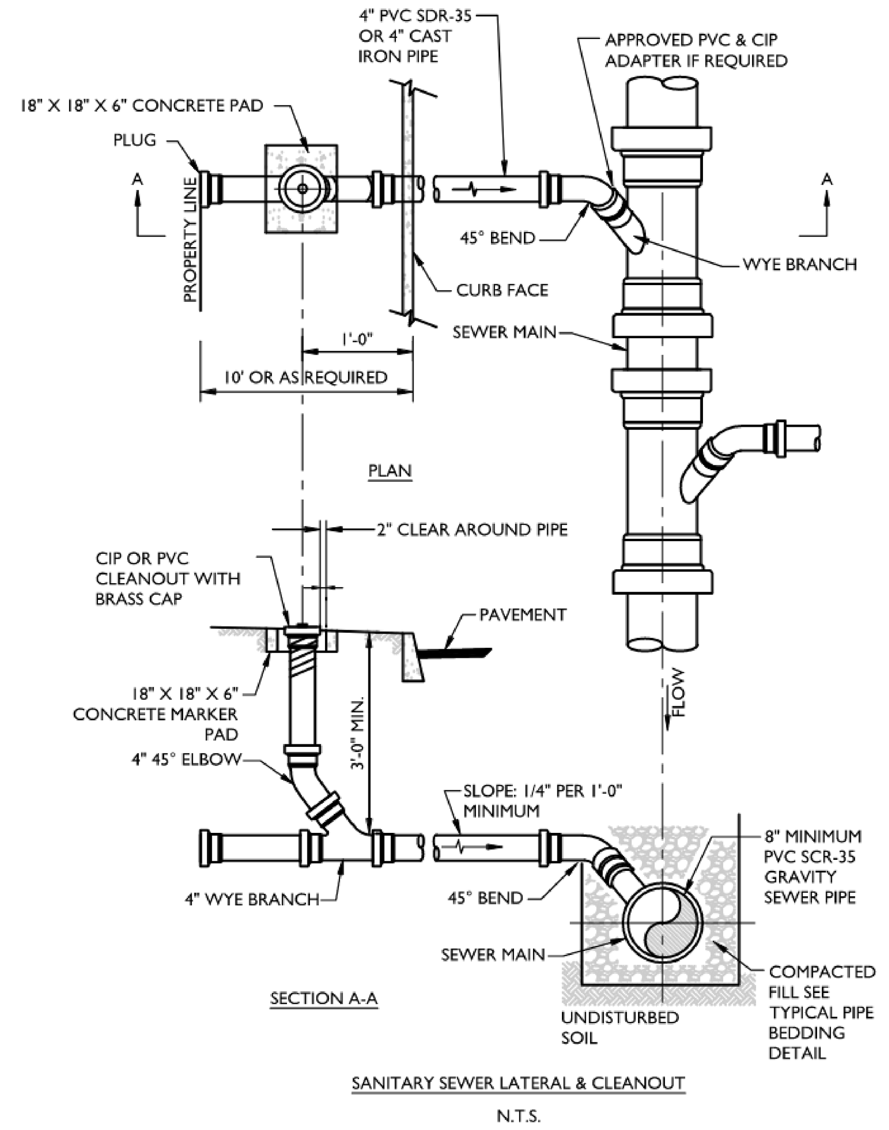

SANITARY SEWER LATERAL & CLEANOUT DETAIL

NOT TO SCALE MCNJ-UTIL-SSWR-1801 05/01/17

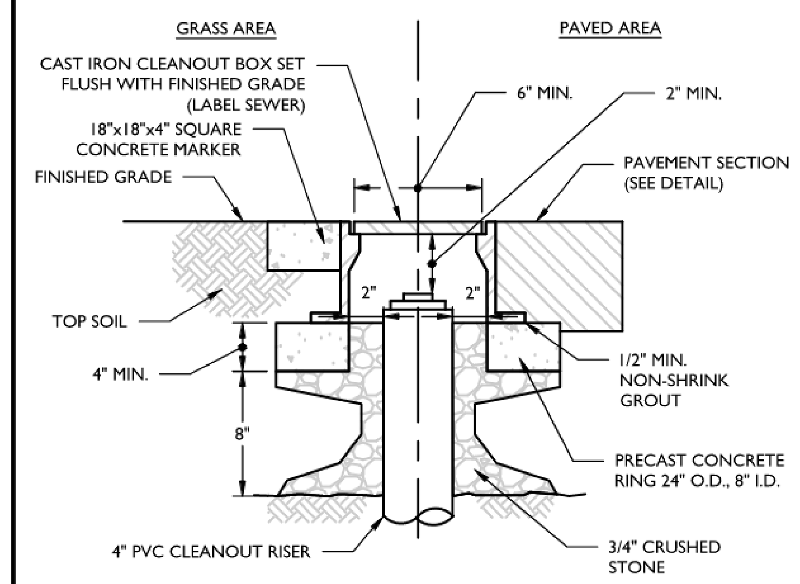

NOTES

1. ALL PVC CLEANOUTS TO HAVE CAST IRON FRAME AND COVER PROTECTION BOX. DESIGN FOR H20 LOADING.

CLEANOUT PROTECTION BOX DETAIL

NOT TO SCALE MCNJ-UTIL-SSWR-1601 05/01/17

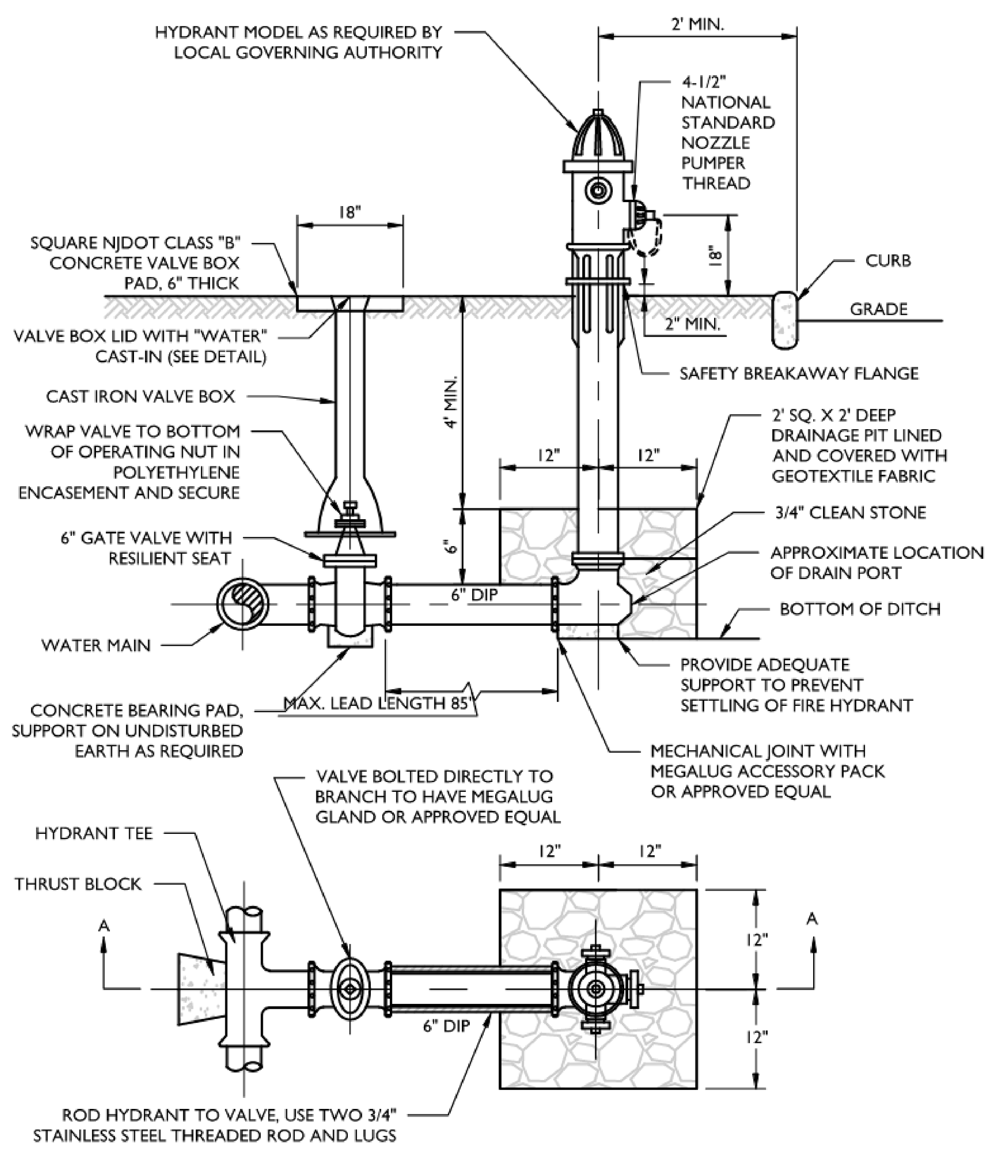

NOTES:

1. HYDRANT SHALL BE **T.W.W. STANDARD U.S. PIPE METROPOLITAN 250 DRY-BARREL** TRAFFIC MODEL DESIGN WITH THE FOLLOWING SPECIFICATION.
   A. SAFETY COUPLED STANDPIPE.
   B. 6" MECHANICAL JOINT INLET CONNECTION
   C. TWO 2-1/2" NATIONAL STANDARD THREAD HOSE NOZZLES.
   D. ONE 4-1/2" NATIONAL STANDARD THREAD STEAMER NOZZLE, FACING THE ROAD.
   E. HYDRANT OPERATORS AND HYDRANT NOZZLE CAP NUTS SHALL BE IN ACCORDANCE WITH AWWA/ANSI STANDARD C502.
   F. HYDRANT HOSE CAPS SHALL BE ATTACHED BY MEANS OF CHAINS.
   G. HYDRANT BARRELS SHALL BE PAINTED - **RED**, BONNETS - **YELLOW**, AND NOZZLE CAPS - **BLACK** TO INDICATE THE AVAILABLE FIRE FLOW OR AS IN ACCORDANCE WITH THE LOCAL REQUIREMENTS.
   H. HYDRANTS SHALL OPEN COUNTER CLOCKWISE.
2. STANDPIPE (BREAK-AWAY) COUPLING SHALL NOT EXCEED A MAXIMUM OF 5 INCHES FROM THE TOP OF THE CURB TO THE BOTTOM OF COUPLING.
3. THE DRAIN VALVE SHALL BE CLEAR OF ANY OBSTRUCTIONS, AND 3/4" CLEAN GRAVEL BE PLACED FROM THE BOTTOM OF THE HYDRANT TO A POINT 6" ABOVE THE HYDRANT LATERAL PIPE.
4. THRUST BLOCKS SHALL BE MADE OF NJDOT CLASS "B" CONCRETE, PROVIDED BEHIND THE HYDRANT SHOE.
5. BACKFILL MATERIAL SHALL BE IN ACCORDANCE WITH THE LOCAL JURISDICTION.
6. GATE VALVE SHALL BE **T.W.W. 6" U.S. PIPE METROSEAL. 250 R/S** (RESILIENT SEALED) MECHANICAL JOINT END (RIGHT HAND).
7. WATER LATERAL SHALL BE 6" DUCTILE IRON CEMENT LINED CLASS 52 PIPE.
8. TIE ROD SHALL BE 3/4" DIAMETER TIE ROD WITH EYE BOLTS - TWO REQUIRED (SIDE VIEW SHOWN). RESTRAIN ALL JOINTS ON HYDRANT TEE, VALVE, AND HYDRANT LEAD.
9. HYDRANT TEE SHALL BE U.S. PIPE CATALOG #U-592 TRIM-TYTE DUCTILE IRON, MECHANICAL JOINT OR AN T.W.W. APPROVED SUBSTITUTE.

FIRE HYDRANT (VALVE IN GRASS) DETAIL

NOT TO SCALE MCNJ-UTIL-WATR-1000 05/01/17

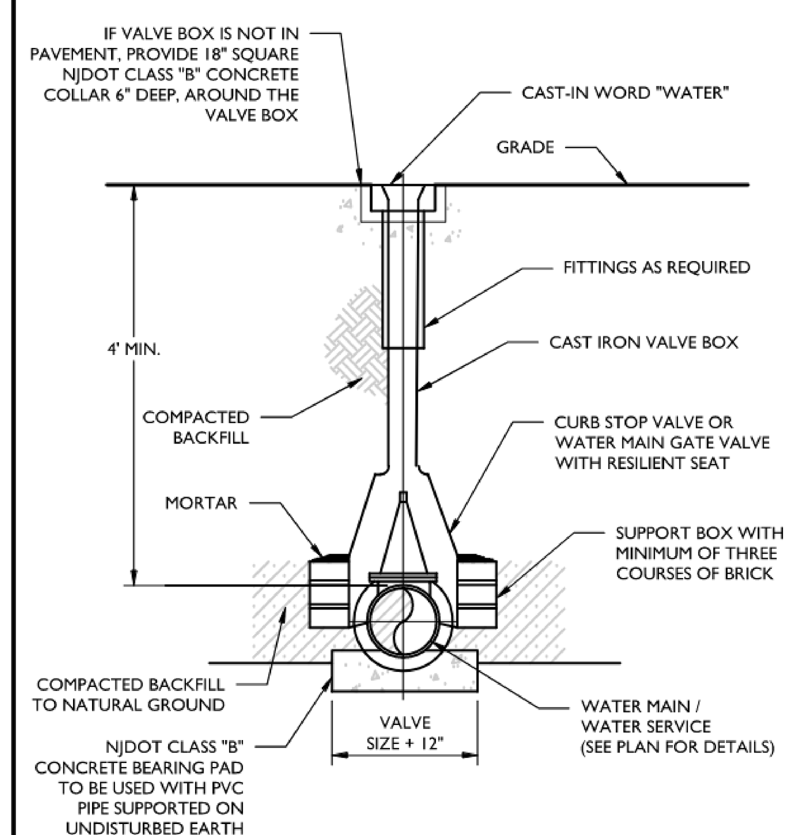

NOTES:

1. VALVE BOX SHOULD HAVE EXTENSION IF WATER MAIN OR SERVICE IS PLACED DEEPER THAN 5 FEET.
2. CURB STOP VALVE BOX SHALL BE MUELLER EXTENSION TYPE WITH ARCH PATTERN BASE, OR APPROVED EQUAL.
3. WATER MAIN VALVE BOX SHALL BE SCREW TYPE ADJUSTABLE MODE, **FIGURE # 4905-22 AS MANUFACTURED BY BINGHAM & TAYLOR OR APPROVED EQUAL.**

WATER VALVE BOX DETAIL

NOT TO SCALE MCNJ-UTIL-WATR-1600 05/01/17

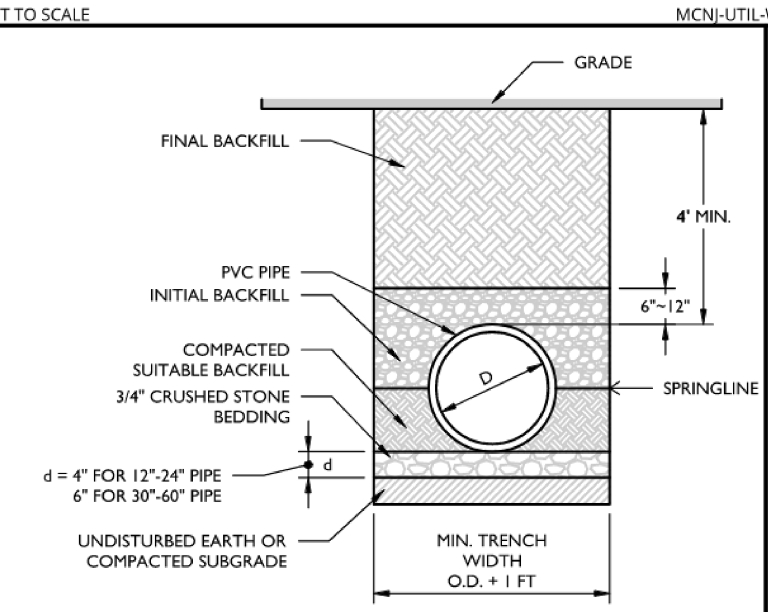

NOTES:

1. ALL PVC GRAVITY PIPE SYSTEMS SHALL BE INSTALLED IN ACCORDANCE WITH ASTM D2321.
2. GRAVITY SANITARY PIPE SHALL BE PVC SDR 35 PER ASTM D3034 OR AS REQUIRED BY THE GOVERNING AUTHORITY.

PVC SANITARY PIPE BEDDING (GRAVITY) DETAIL

NOT TO SCALE MCNJ-UTIL-SSWR-2803 02/01/19

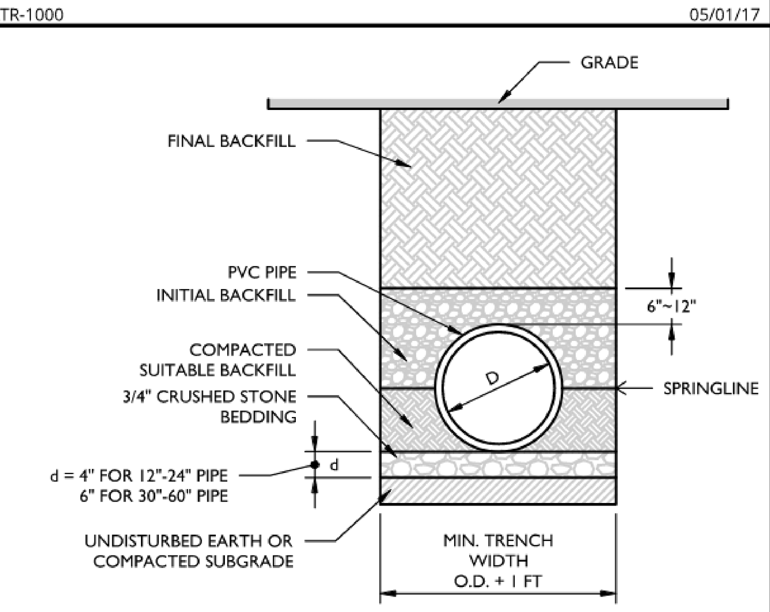

NOTES:

1. ALL PVC FORCE MAIN SHALL BE INSTALLED PER AWWA C605.
2. FORCE MAIN PVC PIPE SHALL BE **CLASS 160 DR26 PER ASTM D2241** OR AS REQUIRED BY THE GOVERNING AUTHORITY.

PVC SANITARY PIPE BEDDING (FORCE MAIN) DETAIL

NOT TO SCALE MCNJ-UTIL-SSWR-2804 01/01/20

MINIMUM SIZE OF CONCRETE THRUST BLOCKS

d	A	B	C	d	A	B	C	d	A	B	C	A	B	C	d x e	A	B
6"	2' - 0"	8"	1' - 3"	6"	2' - 6"	8"	1' - 3"	6"	1' - 6"	6"	1' - 3"	1' - 6"	8"	1' - 3"	6" x 4"	1' - 6"	1' - 0"
8"	2' - 6"	8"	1' - 6"	8"	3' - 0"	8"	1' - 6"	8"	1' - 6"	8"	1' - 9"	1' - 6"	8"	1' - 9"	8" x 4"	2' - 0"	1' - 0"
10"	3' - 0"	10"	2' - 0"	10"	3' - 6"	10"	2' - 0"	10"	2' - 3"	10"	2' - 0"	1' - 6"	10"	2' - 0"	10" x 6"	2' - 4"	1' - 3"
12"	3' - 6"	10"	2' - 6"	12"	3' - 9"	10"	2' - 9"	12"	2' - 6"	10"	2' - 6"	1' - 6"	10"	2' - 6"	10" x 8"	2' - 6"	1' - 6"
TEES & CROSSES				90° BENDS					45° BENDS			22½° & 11¼° BENDS			REDUCERS		

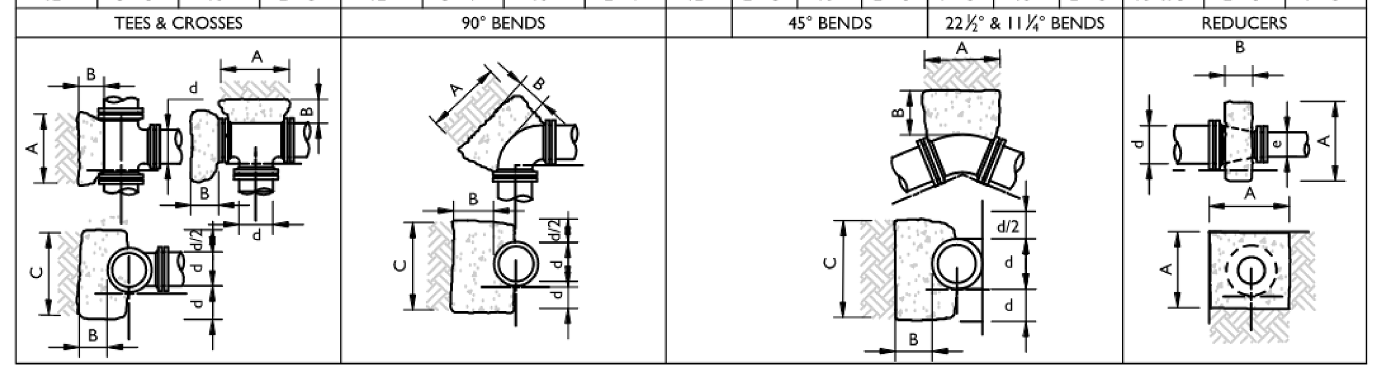

NOTES:

1. ALL HORIZONTAL BENDS SHALL HAVE CONCRETE THRUST BLOCKS WITH MINIMUM BEARING AREAS AGAINST UNDISTURBED SOIL AND NO JOINT SHALL BE COVERED WITH CONCRETE.
2. BEARING AREAS ARE BASED UPON UNDISTURBED SOIL WITH A MINIMUM BEARING CAPACITY OF 0.5 TONS PER SQUARE FOOT. FOR A LESSER SOIL BEARING CAPACITY THESE AREAS SHALL BE INCREASED ACCORDINGLY.
3. THRUST BLOCKS SHALL BE POURED DIRECTLY AGAINST TRENCH WALLS AND SHALL BE NJDOT CLASS "B" CONCRETE.
4. DETAILS FOR SUPPORTS AND BRACING FOR VERTICAL BENDS FOR 12" DIAMETER OR LARGER SHALL BE APPROVED BY THE AUTHORITY PRIOR TO CONSTRUCTION.

THRUST BLOCKS DETAIL

NOT TO SCALE MCNJ-UTIL-WATR-1400 05/01/17

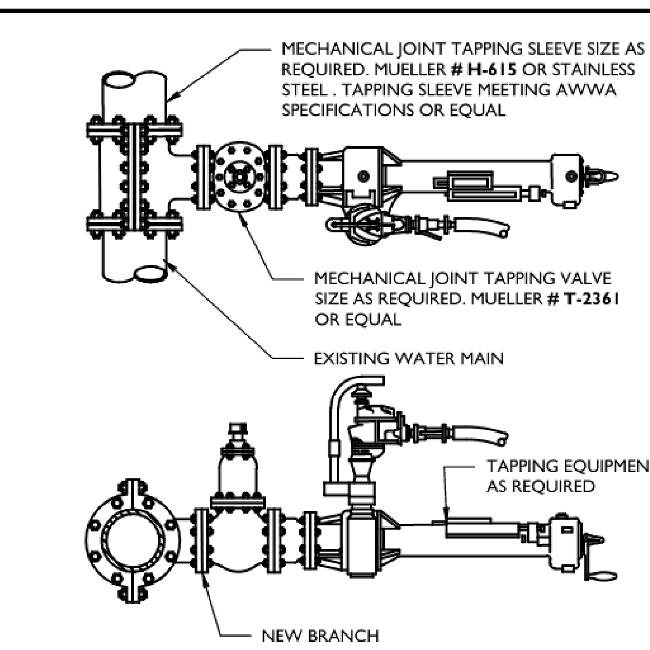

NOTES:

1. WET TAP VALVE CAN BE INSTALLED IN EITHER VERTICAL OR HORIZONTAL POSITION.
2. CONTRACTOR SHALL VERIFY DEPTH OF BURY, MATERIAL, DIAMETER (O.D.) AND OPERATING PRESSURE OF EXISTING WATER MAIN PRIOR TO ORDERING OF WET TAP UNIT.

WET TAP DETAIL

NOT TO SCALE MCNJ-UTIL-WATR-1200 03/01/20

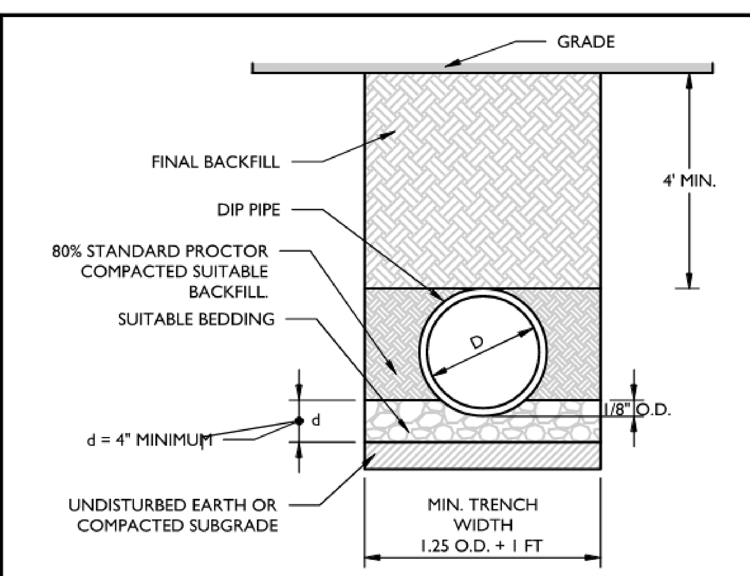

NOTES:

1. ALL PIPE SYSTEMS AND BACKFILL SHALL BE INSTALLED IN ACCORDANCE WITH ANSI/AWWA C600.
2. WATER MAIN PIPE SHALL BE CEMENT LINED DUCTILE IRON PIPE (DIP) PRESSURE **CLASS 150**, THICKNESS **CLASS 52** WITH ASPHALTIC EPOXY TYPE COATING.
3. SUITABLE BACKFILL MATERIAL SHALL BE SAND, GRAVEL, OR 3/4" CRUSHED STONE.

DIP WATER PIPE BEDDING (TYPE 4) DETAIL

NOT TO SCALE MCNJ-UTIL-WATR-1900 05/01/17

Colliers
Engineering & Design
www.colliersengineering.com

Copyright © 2023. Colliers Engineering & Design All Rights Reserved. This drawing and all the information contained herein is authorized for use only by the party for whom the services were contracted or to whom it is certified. This drawing may not be copied, reused, disclosed, distributed or relied upon for any other purpose without the express written consent of Colliers Engineering & Design.

Doing Business as MASER CONSULTING

811 Know what's below. Call before you dig.
PROTECT YOURSELF
ALL STATES REQUIRE NOTIFICATION OF EXCAVATORS, DESIGNERS, OR ANY PERSON PREPARING TO DISTURB THE EARTH'S SURFACE ANYWHERE IN ANY STATE
FOR STATE SPECIFIC DIRECT PHONE NUMBERS VISIT: WWW.CALL811.COM

REV	DATE	DRAWN BY	DESCRIPTION
-	-	-	-

Vincent D. Kelly
NEW JERSEY LICENSED PROFESSIONAL ENGINEER
LICENSE NUMBER: GE55812
COLLIERS ENGINEERING & DESIGN, INC.
N.J. C.O.A. #: 24GA27986500

PRELIMINARY/FINAL MAJOR SITE PLAN

FOR

PRESTIGE COMMERCE CENTER

BLOCK 4.46, LOTS 1.04 & 1.07
BLOCK 4.461, LOT 1.07

TOWNSHIP OF NORTH BRUNSWICK
MIDDLESEX COUNTY
NEW JERSEY

Colliers Engineering & Design
HOLMDEL (Headquarters)
101 Crawfords Corner Road, Suite 3400
Holmdel, NJ 07733
Phone: 732.383.1950
COLLIERS ENGINEERING & DESIGN, INC. DOING BUSINESS AS MASER CONSULTING

SCALE:	DATE:	DRAWN BY:	CHECKED BY:
AS SHOWN	04/27/2023	MB & PC	VDK
PROJECT NUMBER: 21000124A	DRAWING NAME: C-DTLS		

SHEET TITLE: CONSTRUCTION DETAILS

NOTE: DO NOT SCALE DRAWINGS FOR CONSTRUCTION.

2021\21000124A\Engineering Drawings\Engineering\Site Plans\C-DTLS.dwg\C-14-DETAILS By: VKELLY