PRELIMINARY AND FINAL MAJOR SITE PLAN
& MAJOR SUBDIVISION PLAN
FOR
AMARANTH AT NORTH BRUNSWICK
PHASES 3 & 4
BLOCK 148, LOT 1.01
TOWNSHIP OF NORTH BRUNWICK
MIDDLESEX COUNTY, NEW JERSEY

PROPERTY OWNERS WITHIN 200 FT.

BLOCK	LOT	Property Location	Owner Name	Mailing Address	City, State	Zip
148.06	1	ROUTE 130	RENAISSANCE GLENN LLC	90 WOODBRIDGE CTR DR 600	WOODBRIDGE NJ	07095
148.06	4	RENAISSANCE BLVD	NORTH BRUNSWICK TOWNSHIP	710 HERMANN ROAD	NORTH BRUNSWICK NJ	08902
148.06	5	402 VIBURNUM COURT	JAIN KAMLESH & JAIN NEHA	402 VIBURNUM COURT	NORTH BRUNSWICK NJ	08902
148.06	6	404 VIBURNUM COURT	WANGA RICHARD & GIWANG GLADYS	404 VIBURNUM COURT	NORTH BRUNSWICK NJ	08902
148.06	7	405 VIBURNUM COURT	WIJEGUNARATCHANA LAKSEN & THANUJA	405 VIBURNUM COURT	NORTH BRUNSWICK NJ	08902
148.06	8	403 VIBURNUM COURT	SARIPALLI RAVINDRA	403 VIBURNUM COURT	NORTH BRUNSWICK NJ	08902
148.06	9	602 DAISY COURT	PATEL VIBHA & PANKAJ	602 DAISY COURT	NORTH BRUNSWICK NJ	08902
148.06	10	604 DAISY COURT	PRADHAN MANISH & SWAPNA	604 DAISY COURT	NORTH BRUNSWICK NJ	08902
148.06	11	606 DAISY COURT	SHRIVASTAVA KAPIL & NEHA	606 DAISY COURT	NORTH BRUNSWICK NJ	08902
148.06	12	608 DAISY COURT	KONDURU KIRAN KUMAR & MAHI	608 DAISY COURT	NORTH BRUNSWICK NJ	08902
148.06	96	112 CARDINAL COURT	SUBRAMANIAM P & DEIVANAYAGAM S	112 CARDINAL COURT	NORTH BRUNSWICK NJ	08902
148.06	97	111 CARDINAL COURT	CHALOO AJAY KUMAR	111 CARDINAL COURT	NORTH BRUNSWICK NJ	08902
148.06	98	109 CARDINAL COURT	RAYA KIRAN K & TUPAKULA MANJUVANI	109 CARDINAL COURT	NORTH BRUNSWICK NJ	08902
148.06	99	107 CARDINAL COURT	KANKATI RAVINDRA P & MADDIKUNTA K V	107 CARDINAL COURT	NORTH BRUNSWICK NJ	08902
148.06	100	105 CARDINAL COURT	MALLIK PRASAD S & SANDHYA	105 CARDINAL COURT	NORTH BRUNSWICK NJ	08902
148.06	101	103 CARDINAL COURT	DHANKULA SRINIVASA & KARUMANCHI P	103 CARDINAL COURT	NORTH BRUNSWICK NJ	08902
148.06	102	101 CARDINAL COURT	APPANAGAARI VEERENDRA & VELDURTHY V	101 CARDINAL COURT	NORTH BRUNSWICK NJ	08902
148.06	102.99	EAGLE DRIVE	FOREST PARK HOA SMIDLANTIC MGMT	315 RARITAN AVENUE	HIGHLAND PARK NJ	99999
148.07	2	HAWTHORNE ROAD	RENAISSANCE GREENS HOA NJMIDLANTIC	315 RARITAN AVENUE	HIGHLAND PARK NJ	99999
148.07	2.01	2 HAWTHORNE ROAD	BHANDARE NARESH & RADIYA	2 HAWTHORNE ROAD	NORTH BRUNSWICK NJ	08902
148.07	2.02	4 HAWTHORNE ROAD	SHAH PARESH & PRATIMA	4 HAWTHORNE ROAD	NORTH BRUNSWICK NJ	08902
148.07	2.03	6 HAWTHORNE ROAD	NATARAJAN SHANKAR RAJ & RAJ S S S	6 HAWTHORNE ROAD	NORTH BRUNSWICK NJ	08902
148.07	2.04	8 HAWTHORNE ROAD	GUPTA MONISH & NEETU	8 HAWTHORNE ROAD	NORTH BRUNSWICK NJ	08902
148.07	2.05	10 HAWTHORNE ROAD	BITRA BALAJI & JYOTHI	10 HAWTHORNE ROAD	NORTH BRUNSWICK NJ	08902
148.07	2.100	356 HAWTHORNE ROAD	TANDABANY K & VELOUR R	356 HAWTHORNE ROAD	NORTH BRUNSWICK NJ	08902
148.07	2.101	358 HAWTHORNE ROAD	GANTA SRINIVAS & PADMAPRIYA	358 HAWTHORNE ROAD	NORTH BRUNSWICK NJ	08902
148.07	2.102	360 HAWTHORNE ROAD	SRINIVASAN N & CHANDRASEKARAN V	360 HAWTHORNE ROAD	NORTH BRUNSWICK NJ	08902
148.07	2.103	362 HAWTHORNE ROAD	AJJAVARAPU SUDHEER & REDDA PRAVALLIKA	362 HAWTHORNE ROAD	NORTH BRUNSWICK NJ	08902
148.07	2.104	364 HAWTHORNE ROAD	PINDIPOL KRISHNAMURTHY & SHREELEKHA	364 HAWTHORNE ROAD	NORTH BRUNSWICK NJ	08902
148.07	2.97	350 HAWTHORNE ROAD	DRAKSHARAM VENKATA S BABU&MADHURI	350 HAWTHORNE ROAD	NORTH BRUNSWICK NJ	08902
148.07	2.98	352 HAWTHORNE ROAD	GAGLANI SANJAY C & JIGNA S	352 HAWTHORNE ROAD	NORTH BRUNSWICK NJ	08902
148.07	2.99	354 HAWTHORNE ROAD	GANESAN M & ANGAMUTHU GEETHA	354 HAWTHORNE ROAD	NORTH BRUNSWICK NJ	08902
148.10	2.176	HAWTHORNE ROAD	RENAISSANCE GREENS HOA NJMIDLANTIC	315 RARITAN AVENUE	HIGHLAND PARK NJ	99999
148.12	1	ROUTE 130	THE BOULEVARD AT RENAISSANCE LLC	90 WOODBRIDGE CTR DR 600	WOODBRIDGE NJ	07095
148.13	1.01	ROUTE 130	NORTH BRUNSWICK TOWNSHIP BOE	OLD GEORGES RD POB 6016	NORTH BRUNSWICK NJ	08902
148.13	1.02	88 RENAISSANCE BOULEVARD	NORTH BRUNSWICK TOWNSHIP	710 HERMANN ROAD	NORTH BRUNSWICK NJ	08902
224	11	2430 ROUTE 130	2440 REALTY CORPORATION	2600 US ROUTE 130 NORTH	NORTH BRUNSWICK NJ	08902
224	12.02	2 QUARRY LANE	ESH PROPERTIES LLC	1 KIRKSTONE CIRCLE	WESTFIELD NJ	07090
224	13.03	100 APPLE ORCHARD LANE	COUNTY OF MIDDLESEX	1 JFK SQUARE PO BOX 871	NEW BRUNSWICK NJ	08903

THE FOLLOWING OTHER AGENCIES MUST ALSO BE NOTIFIED :

Middlesex County Planning Board
County Administration Building
5th Floor
75 Bayard Street
New Brunswick, NJ 08901

North Brunswick Township
710 Hermann Road
North Brunswick, NJ 08902
Attn: Township Clerk

Public Service Electric & Gas Co.
Manager – Corporate Properties
80 Park Place, T6B
Newark, NJ 07102

Verizon
NJ Gen. Tax Administration
Broad Street – Room 305
Newark, NJ 07101

Cablevision of Raritan Valley
275 Centennial Avenue
CN 6805
Piscataway, NJ 08855-6805
Attn: Margurite Preodorville

Department of Transportation
State of New Jersey
1035 Parkway
Trenton, NJ 08625

Construction Department Mr. Tim Allen
Texas Eastern Transmission Corp.
501 Coolidge Street
South Plainfield, NJ 07080

Sunoco Pipeline L.P.
Right of Way
Montello Complex
525 Fritztown Road
Sinking Spring, PA 19608

I HEREBY CERTIFY THAT I AM THE OWNER OF RECORD OF THE SITE HEREIN DEPICTED AND THAT I CONCUR WITH THE SUBMISSION.

OWNER _____ DATE _____

APPROVED BY THE PLANNING BOARD OF THE TOWNSHIP OF NORTH BRUNSWICK AT THE REGULAR MEETING OF _____.
DATE

CHAIRMAN _____ DATE _____

SECRETARY _____ DATE _____

ENGINEER _____ DATE _____

INDEX OF SHEET

DESCRIPTION	SHT. No.
COVER SHEET	1.00
EXISTING CONDITIONS / DEMOLITION PLAN	2.00
OVERALL DIMENSION PLAN	3.00
DIMENSION PLAN	3.01
GRADING PLAN	4.00
UTILITIES PLAN	5.00
PROFILES	6.00
SOIL EROSION & SEDIMENT CONTROL PLAN	7.00
SOIL EROSION & SEDIMENT CONTROL DETAILS	7.01 - 7.02
SOIL MANAGEMENT & PREPARATION PLAN	7.03
LANDSCAPE PLAN	8.00
LANDSCAPE DETAILS	8.01
LIGHTING PLAN	9.00
LIGHTING DETAILS	9.01 - 9.02
CONSTRUCTION DETAILS	10.00 - 10.05
TRUCK CIRCULATION PLAN	11.00
TOTAL SHEETS	23

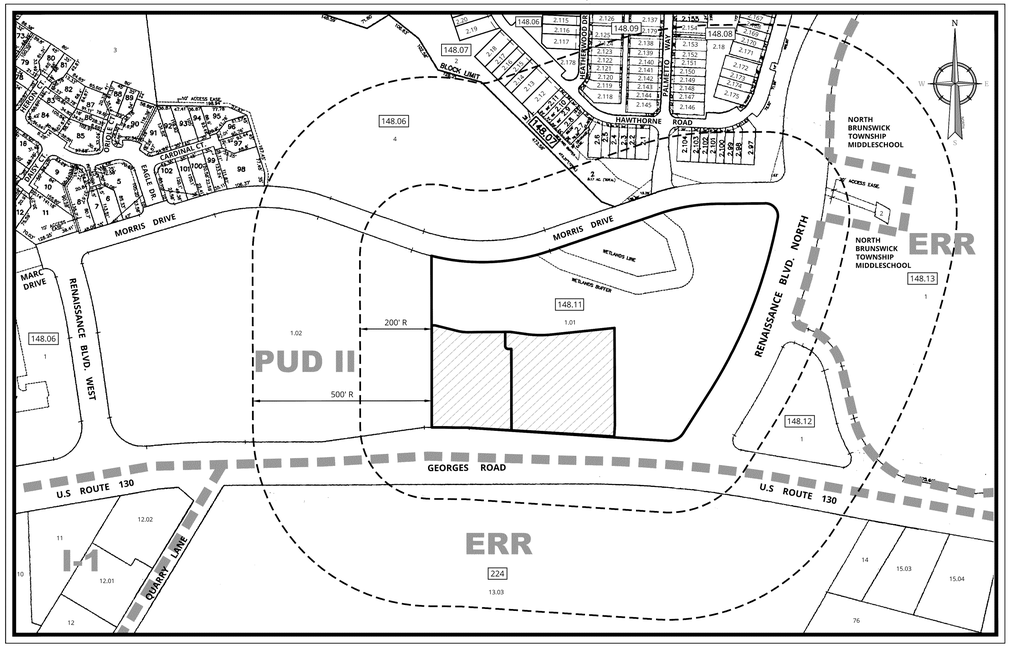

TOWNSHIP OF NORTH BRUNSWICK
ERR EDUCATION-RECREATION-RESEARCH
I-1 INDUSTRIAL
PUD-II PLANNED UNIT DEVELOPMENT

KEY & ZONING MAP

ZONE BOUNDARY

SOURCE: REALQUEST
200 0 200
SCALE : 1" = 200'

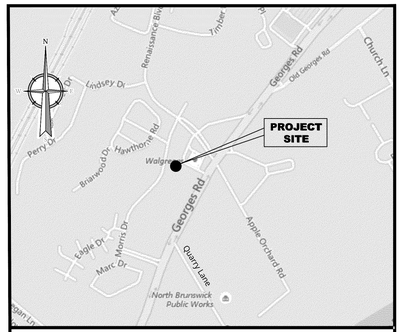

LOCATION MAP
SCALE: 1" = 1,000'

GENERAL INFORMATION

1. THE SUBJECT PROPERTY IS KNOWN AS LOT1.01 IN BLOCK 148.11 AS SHOWN ON SHEET 5B OF THE OFFICIAL TAX MAP OF THE TOWNSHIP OF NORTH BRUNSWICK, MIDDLESEX COUNTY, NEW JERSEY, DATED JUNE, 1998 AND REVISED THROUGH APRIL, 2022.

2. THE PROPERTY IS LOCATED IN THE PUD-II (PLANNED UNIT DEVELOPMENT) ZONE DISTRICT AND CONTAINS A TOTAL TRACT AREA OF 481.571 ST. 11.055 ACRES.

OWNER: K-LAND NO. 54, LLC
433 RIVER ROAD
HIGHLAND PARK, NJ 08904
(732) 846-5900

APPLICANT: K-LAND NO. 75, LLC
433 RIVER ROAD
HIGHLAND PARK, NJ 08904
(732) 846-5900

THE SUBJECT PROPERTY IS PRESENTLY PARTIALLY DEVELOPED WITH A WALGREENS AND LIGHTBRIDGE ACADEMY ALONG WITH APURTENANT SITE IMPROVEMENTS TYPICAL OF COMMERCIAL DEVELOPMENTS. THE BALANCE OF THE SITE CONSISTS OF GRASSED, WOODED, AND PAVEMENT AREA. THE APPLICANT PROPOSES TO CONSTRUCT A WAWA CONVENIENCE STORE WITH A PICK-UP WINDOW AND THE ASSOCIATED SALE OF MOTOR VEHICLE FUEL. A TAKE 5 OIL CHANGE FACILITY IS ALSO PROPOSED. ADDITIONALLY, THE APPLICANT PROPOSES TO SUBDIVIDE EXISTING LOT 1.01 INTO FOUR (4) SEPARATE TAX PARCELS AS PART OF A MAJOR SUBDIVISION APPLICATION.

THIS PROPERTY RECEIVED PRELIMINARY & FINAL SITE PLAN APPROVAL (APPLICATION NO. 2649) FROM THE TOWNSHIP OF NORTH BRUNSWICK TO CONSTRUCT TWO (2) FOUR-STORY RESIDENTIAL BUILDINGS CONSISTING OF 45 TWO-BEDROOM UNITS EACH, OR 90 UNITS TOTAL.

ZONE DATA: PUD II - PLANNED UNIT DEVELOPMENT

	REQUIRED/ PERMITTED	WALGREENS/ LIGHTBRIDGE ACADEMY LOT 1.01	PROPOSED WAWA LOT 1.04	PROPOSED WAWA LOT 1.05	APPROVED RESIDENTIAL LOT 1.03
PRINCIPAL RESIDENTIAL BUILDINGS					
MINIMUM RESIDENTIAL ROUTE 130 SETBACK	50 FT				361 FT
MINIMUM RESIDENTIAL TOWNSHIP ROAD SETBACK	35 FT				35 FT
MINIMUM RESIDENTIAL INTERNAL ROAD SETBACK	20 FT				64.7 FT
MINIMUM RESIDENTIAL PARKING SETBACK	10 FT				10 FT
MINIMUM RESIDENTIAL BUILDING SEPARATION	30 FT				89.8 FT
MINIMUM RESIDENTIAL SETBACK TO NON-RESIDENTIAL USE	50 FT				67.5 FT
MINIMUM RESIDENTIAL ROUTE 130 BUFFER	50 FT				N/A
MAXIMUM RESIDENTIAL BUILDING HEIGHT	55 FT				47.5
MAXIMUM IMPERVIOUS COVERAGE	N/A	62.2%	83.8%	46.2%	68.0%
MAXIMUM PRINCIPAL BUILDING COVERAGE	N/A	15.8%	7.7%	2.9%	17.1%
PRINCIPAL COMMERCIAL BUILDINGS					
MAXIMUM FLOOR AREA RATIO	0.3	0.08	0.08	0.03	N/A
MAXIMUM BUILDING HEIGHT	100 FT	COMPLIES	26' - 11"	28' - 6 $\frac{1}{2}$"	N/A
PARKING					
USE: RETAIL & SERVICE STORE - 1 SPACE/200 SF GFA	WAWA: 6,372/200 = 32 WALGREENS: 14,737/200 = 74 LIGHTBRIDGE: 10,568/200 = 53	107	50		
USE: MOTOR VEHICLE SERVICE STATION - 2 SPACES PER EMPLOYEE	TAKE 5: 2*6=12			20	
USE: RESIDENTIAL - 1-BED - 1.25 PER UNIT 2-BED - 1.75 PER UNIT	133				161
LOADING: 1 SPACE FOR SERVICE BUILDINGS OVER 5,000 SF		1	1		
ADA		6	2	1	6
TOTAL		107	50	20	161
SIGNAGE					
NUMBER OF FREESTANDING SIGNS	1 / EACH RESIDENTIAL OR NON-RESIDENTIAL DEVELOPMENT	1	1	1	0
TOTAL SIGN AREA	100 SF (INDIVIDUAL) 200 SF (COMBINED)	130 SF (E)	61.45 SF	49.78 SF	

(E) = PRE-EXISTING NON-CONFORMING CONDITION
(V) = VARIANCE REQUIRED

3. BOUNDARY SURVEY AND TOPOGRAPHIC INFORMATION SHOWN HEREON IS TAKEN FROM A PLAN ENTITLED "PARTIAL TOPOGRAPHICAL SURVEY FOR AMARANTH AT NORTH BRUNSWICK", SHEET 1 OF 1 DATED 6/18/24, PREPARED BY ERIC V. WILDE, P.L.S. LIC. NO. GS43279 OF NEW JERSEY, OF COLLIERS ENGINEERING & DESIGN.

4. PROPOSED LOT LINES SHWN HEREON ARE TAKEN FROM A PLAN ENTITLED "FINAL PLAT - MAJOR SUBDIVISION FOR AMARANTH AT NORTH BRUNSWICK PHASES 3 & 4", DATED 6/20/25, PREPARED BY ERIC V. WILDE, P.L.S. LIC. NO. GS43279 OF NEW JERSEY, OF COLLIERS ENGINEERING & DESIGN.

5. THE HORIZONTAL DATUM IS RELATIVE TO THE NEW JERSEY STATE PLANE COORDINATE SYSTEM AND ADJUSTED TO NAD1983. THE VERTICAL DATUM IS RELATIVE TO OR NAVD 1988.

6. THE LIMITS OF FRESHWATER WETLANDS SHOWN HEREON ARE BASED UPON NJDEP LOI-LINE VERIFICATION FILE NO. 1215-10-0002.1 FWW 10002. A GENERAL PERMIT 6 APPLICATION WAS FILED WITH THE NEW JERSEY DEPARTMENT OF ENVIRONMENTAL PROTECTION AND IS CURRENTLY PENDING.

7. NO 100 YEAR FLOOD PLAINS ARE KNOWN TO EXIST ON THE SITE PER THE FLOOD INSURANCE RATE MAP FOR THE TOWN SHIP OF NORTH BRUNSWICK, MIDDLESEX COUNATY, NEW JERSEY, DATED 7/6/2010 PREPARED BY THE FEDERAL EMERGENCY MANAGEMENT AGENCY.

8. GEOTECHNICAL INFORMATION AND SOIL TEST PIT LOCATIONS SHOWN HEREON ARE AS PRESENTED IN A REPORT ENTITLED "MSG SOILS INVESTIGATION FOR AMARANTH II AT NORTH BRUNSWICK SITE", DATED: 6/12/2025, PREPARED BY OWEES ENGINEERING, INC.

9. THIS SET OF PLANS IS NOT DEPICTING ENVIRONMENTAL CONDITIONS OR A CERTIFICATION/WARRANTY REGARDING THE PRESENCE OR ABSENCE OF ENVIRONMENTALLY IMPACTED SITE CONDITIONS. COLLIERS ENGINEERING & DESIGN HAS PERFORMED NO EXPLORATORY OR TESTING SERVICES, INTERPRETATIONS, CONCLUSIONS OR OTHER SITE ENVIRONMENTAL SERVICES RELATED TO THE DETERMINATION OF THE POTENTIAL FOR CHEMICAL, TOXIC, RADIOACTIVE OR OTHER TYPE OF CONTAMINANTS AFFECTING THE PROPERTY AND THE UNDERSIGNED PROFESSIONAL IS NOT QUALIFIED TO DETERMINE THE EXISTENCE OF SAME. SHOULD ENVIRONMENTAL CONTAMINATION OR WASTE BE DISCOVERED, THE OWNER AND CONTRACTOR SHALL BE RESPONSIBLE FOR COMPLYING WITH ALL APPLICABLE LAWS AND REGULATIONS.

10. THIS IS A SITE DEVELOPMENT PLAN AND UNLESS SPECIFICALLY NOTED ELSEWHERE HEREON, IS NOT A SURVEY.

11. DO NOT SCALE DRAWINGS AS THEY PERTAIN TO ADJACENT AND SURROUNDING PHYSICAL CONDITIONS, BUILDINGS, STRUCTURES, ETC. THEY ARE SCHEMATIC ONLY, EXCEPT WHERE DIMENSIONS ARE SHOWN THERETO.

12. THIS SET OF PLANS HAS BEEN PREPARED FOR THE PURPOSES OF MUNICIPAL AND AGENCY REVIEW AND APPROVAL. THIS SET OF PLANS SHALL NOT BE UTILIZED AS CONSTRUCTION DOCUMENTS UNTIL ALL APPROVALS REQUIRED HAVE BEEN OBTAINED, ALL CONDITIONS OF APPROVAL HAVE BEEN SATISFIED AND THE DRAWINGS HAVE BEEN STAMPED "ISSUED FOR CONSTRUCTION". THIS SHALL INCLUDE APPROVAL OF ALL CATALOG CUTS, SHOP DRAWINGS AND/OR DESIGN CALCULATIONS AS REQUIRED BY THE PROJECT OWNER AND/OR MUNICIPAL ENGINEER.

13. THE CONTRACTOR IS RESPONSIBLE FOR PROJECT SAFETY, INCLUDING PROVISION OF ALL APPROPRIATE SAFETY DEVICES AND TRAINING REQUIRED.

14. PRIOR TO ANY EXCAVATION, THE CONTRACTOR MUST CALL 811 TO REQUEST A UTILITY MARKOUT.

15. CONTRACTOR IS ADVISED THAT WHEN INDICATED ON THE PLANS AND/OR IN THE SPECIFICATIONS, REQUIRED BY THE MUNICIPAL/COUNTY/STATE/FEDERAL AGENCY/UTILITY COMPANIES, OR DEEMED NECESSARY BY THE RESIDENT ENGINEER OR DESIGN ENGINEER AS ASSIGNED BY THE CLIENT AND OR APPROVING AGENCY, THE CONTRACTOR MUST SUBMIT SHOP DRAWINGS FOR REVIEW AND RECEIVE APPROVAL PRIOR TO FABRICATION OF THE RESPECTIVE ITEM.

SITE NOTES

1. BUILDING FOOTPRINT DIMENSIONS SHOWN HEREON ARE APPROXIMATE. FINAL BUILDING FOOTPRINT DIMENSIONS FOR EACH BUILDING SHALL BE FURNISHED ON THE INDIVIDUAL ARCHITECTURAL PLANS AT THE TIME OF APPLICATION FOR A BUILDING PERMIT. ALL STRUCTURES SHALL CONFORM TO THE APPROVED BULK ZONING REQUIREMENTS.

2. CURB RAMPS ARE TO BE CONSTRUCTED FLUSH WITH THE FINISHED PAVEMENT SURFACE. ACCESSIBLE CURB RAMPS INSTALLED WITHIN THE PUBLIC RIGHT OF WAY ARE TO HAVE DETECTABLE WARNING SURFACES COMPLIANT WITH FEDERAL ACCESSIBILITY GUIDELINES FOR PEDESTRIAN FACILITIES IN THE PUBLIC RIGHT OF WAY.

3. TRAFFIC SIGNAGE AND STRIPING SHALL CORRESPOND TO THE MANUAL ON UNIFORM TRAFFIC CONTROL DEVICES.

4. REFUSE AND RECYCLABLES SHALL BE STORED WITHIN OUTSIDE SCREENED TRASH ENCLOSURES AS NOTED ON THE PLANS, AND PICKED UP BY PRIVATE WASTE DISPOSAL HAULER.

5. THE CONTRACTOR SHALL BE RESPONSIBLE FOR THE PROPER DISPOSAL OF ALL WASTE MATERIALS IN ACCORDANCE WITH GOVERNING REGULATIONS AND AGENCIES.

6. THERE SHALL BE NO ON-SITE BURIAL OF CONSTRUCTION MATERIALS, TREE BRANCHES, STUMPS, OR OTHER DELETERIOUS MATERIALS.

7. MATERIALS, WORKMANSHIP, AND CONSTRUCTION FOR THE SITE IMPROVEMENTS SHOWN HEREON SHALL BE IN ACCORDANCE WITH:

   A. NEW JERSEY DEPARTMENT OF TRANSPORTATION "STANDARD SPECIFICATIONS FOR ROAD AND BRIDGE CONSTRUCTION", 2019, AS SUPPLEMENTED.
   B. CURRENT PREVAILING MUNICIPAL, COUNTY, AND/OR STATE AGENCY SPECIFICATIONS, STANDARDS, CONDITIONS, AND REQUIREMENTS.
   C. CURRENT PREVAILING UTILITY COMPANY/AUTHORITY SPECIFICATIONS, STANDARDS, AND REQUIREMENTS.
   D. CURRENT MANUFACTURER SPECIFICATIONS, STANDARDS, AND REQUIREMENTS.
   E. CURRENT BUILDING CODES.
   F. FEDERAL PUBLIC RIGHT OF WAY ACCESSIBILITY GUIDELINES (PROWAG).

UTILITY NOTES

1. EXISTING UTILITY INFORMATION SHOWN HEREON HAS BEEN COLLECTED FROM VARIOUS SOURCES AND IS NOT GUARANTEED AS TO ACCURACY OR COMPLETENESS. THE CONTRACTOR MUST VERIFY ALL INFORMATION TO HIS SATISFACTION PRIOR TO EXCAVATION. WHERE EXISTING UTILITIES ARE TO BE CROSSED BY PROPOSED CONSTRUCTIONS, TEST PITS MUST BE DUG BY THE CONTRACTOR PRIOR TO CONSTRUCTION TO ASCERTAIN EXISTING INVERTS, MATERIALS, AND SIZES. TEST PIT INFORMATION SHALL BE GIVEN TO THE ENGINEER PRIOR TO CONSTRUCTION TO PERMIT ADJUSTMENTS AS REQUIRED TO AVOID CONFLICTS. THE CONTRACTOR SHALL NOTIFY THE UNDERSIGNED PROFESSIONAL IMMEDIATELY IF ANY FIELD CONDITIONS ENCOUNTERED DIFFER MATERIALLY FROM THOSE REPRESENTED HEREON. SUCH CONDITIONS COULD RENDER THE DESIGNS HEREON INAPPROPRIATE OR INEFFECTIVE.

2. UTILITY RELOCATIONS SHOWN HEREON, IF ANY, ARE FOR INFORMATIONAL PURPOSES ONLY AND MAY NOT REPRESENT ALL REQUIRED UTILITY RELOCATIONS. THE CONTRACTOR IS RESPONSIBLE FOR PERFORMING AND/OR COORDINATING ALL REQUIRED UTILITY RELOCATIONS IN COOPERATION WITH THE RESPECTIVE UTILITY COMPANY/AUTHORITIES.

3. STORM SEWERS SHALL BE CLASS III (OR HIGHER IF NOTED) REINFORCED CONCRETE PIPE (RCP) WITH "O" RING GASKETS OR INTERNALLY PRELUBRICATED GASKET (TYLOX SUPERSEAL OR EQUIVALENT, ADS N-12 HIGH DENSITY POLYETHYLENE PIPE (HDPE), AS NOTED ON THE PLAN, OR APPROVED EQUAL. PROPER PIPE COVERAGE SHALL BE MAINTAINED DURING ALL PHASES OF CONSTRUCTION. PIPE LENGTHS SHOWN HEREON ARE FROM CENTER OF STRUCTURE TO CENTER OF STRUCTURE.

4. CONTRACTOR IS RESPONSIBLE TO DETERMINE WHEN SPECIAL OR OVERSIZED DRAINAGE STRUCTURES ARE REQUIRED. CONTRACTOR TO SUBMIT SHOP DRAWINGS FOR ALL SPECIAL (OVERSIZED) DRAINAGE STRUCTURES TO THE TOWNSHIP ENGINEER FOR APPROVAL PRIOR TO INSTALLATION.

5. WATER SERVICE TO BE PROVIDED FROM THE EXISTING WATER MAIN LINE IN TOWN CENTER DRIVE, OWNED AND OPERATED BY VEOLIA. PROPOSED WATER MAIN EXTENSIONS AND FIRE HYDRANT LOCATIONS ARE SUBJECT TO MUNICIPAL REVIEW AND APPROVAL, ACCORDING TO THE NEW JERSEY DEPARTMENT OF ENVIRONMENTAL PROTECTION REGULATIONS, AMERICAN WATERWORKS ASSOCIATION STANDARDS, AND IN THE PINELANDS AREA, THE STANDARDS OF THE PINELANDS COMPREHENSIVE MANAGEMENT PLAN. PIPE MATERIALS SHALL BE CEMENT LINED DUCTILE IRON PIPE, CLASS 52, WITH ASPHALTIC EPOXY TYPE COATING OR HIGH DENSITY POLYETHYLENE (HDPE) SDR-11 PIPE AS NOTED ON THE PLANS. WATER MAINS SHALL BE INSTALLED TO PROVIDE A MINIMUM 4 FEET OF COVER FROM THE TOP OF PIPE TO THE PROPOSED GRADE.

6. SANITARY SEWER SERVICE SHALL BE PROVIDED BY GRAVITY CONNECTION TO EXISTING SEWER MAIN ON TOWN CENTER DRIVE, OWNED AN OPERATED BY THE TOWNSHIP OF NORTH BRUNSWICK SEWER DEPARTMENT. PROPOSED SEWER MAIN EXTENSIONS AND MANHOLE LOCATIONS ARE SUBJECT TO MUNICIPAL REVIEW AND APPROVAL, ACCORDING TO NEW JERSEY DEPARTMENT OF ENVIRONMENTAL PROTECTION REGULATIONS. PIPE MATERIALS SHALL BE PVC SDR-35, EXCEPT AS NOTED OTHERWISE ON THE PLANS. EXCEPT WHERE SHALLOWER DEPTHS ARE PERMITTED BY THE MUNICIPALITY OR UTILITY AUTHORITY, SEWER LINES, INCLUDING FORCE MAINS AND LATERALS, SHALL BE INSTALLED TO PROVIDE A MINIMUM 3 FEET OF COVER FROM THE TOP OF PIPE TO PROPOSED GRADE.

7. ALL WATER MAINS SHOULD BE SEPARATED FROM SANITARY SEWER AND INDUSTRIAL DISCHARGE LINES BY A MINIMUM HORIZONTAL DISTANCE OF 10 FEET. IF SUCH HORIZONTAL SEPARATION IS NOT POSSIBLE, THE WATER AND SEWER LINES SHALL BE IN SEPARATE TRENCHES (STEP TRENCHES ARE PROHIBITED) WITH THE TOP OF THE SEWER LINE AT LEAST 18 INCHES BELOW THE BOTTOM OF THE WATER MAIN OR WITH SUCH SEPARATION EXPRESSLY APPROVED BY THE DEPARTMENT OF ENVIRONMENTAL PROTECTION.

8. AT THE CROSSINGS OF SEWER LINES AND WATER MAINS, THE TOP OF THE SEWER LINES SHALL BE AT LEAST 18 INCHES BELOW THE BOTTOM OF THE WATER MAIN (SEWER SERVICE LATERALS ARE NOT SUBJECT TO THIS REQUIREMENT). IF SUCH VERTICAL SEPARATION IS NOT POSSIBLE, THE SEWER LINE SHALL BE OF WATERTIGHT CONSTRUCTION (THAT IS DUCTILE IRON PIPE WITH MECHANICAL RESTRAINT JOINTS), WITH WATERTIGHT JOINTS THAT IS A MINIMUM OF 10 FEET FROM THE WATER MAIN. CONTRACTOR SHALL USE TRANSITION COUPLING, POWER SEAL MODEL #3501-OR EQUIVALENT AT DIP/PVC JOINTS.

9. GAS, ELECTRIC, LIGHTING, CABLE TELEVISION, AND ELECTRICAL SERVICE PLANS, IF REQUIRED, SHALL BE PREPARED BY THE RESPECTIVE UTILITY COMPANIES THAT SERVICE THE AREA PRIOR TO SITE CONSTRUCTION AND SHALL BE INSTALLED PER ORDINANCE OR LOCAL UTILITY COMPANIES REQUIREMENTS.

10. TELEPHONE, ELECTRIC, AND GAS LINES WILL BE INSTALLED UNDERGROUND. CROSSINGS OF PROPOSED PAVEMENTS WILL BE INSTALLED PRIOR TO THE CONSTRUCTION OF PAVEMENT BASE COURSE.

ADA INSTRUCTIONS TO CONTRACTOR:

THESE GENERAL NOTES SHALL APPLY TO ALL SHEETS IN THIS SET.

1. CONTRACTOR MUST EXERCISE APPROPRIATE CARE AND PRECISION IN CONSTRUCTION OF ADA (HANDICAPPED) ACCESSIBLE COMPONENTS FOR THE SITE/PROJECT. THESE COMPONENTS, AS CONSTRUCTED, MUST COMPLY WITH THE LATEST FEDERAL ADA STANDARDS FOR ACCESSIBLE DESIGN, AND CONSTRUCTION WITHIN THE PUBLIC RIGHT-OF-WAY MUST COMPLY WITH THE LATEST FEDERAL PROPOSED "ASSESSIBILITY GUIDELINES FOR PEDESTRIAN FACILITIES IN THE PUBLIC RIGHT-OF-WAY" (PROWAG).

2. FINISHED SURFACES ALONG THE ACCESSIBLE ROUTE OF TRAVEL FROM PARKING SPACE, PUBLIC TRANSPORTATION, PEDESTRIAN ACCESS, INTER-BUILDING ACCESS, TO POINTS OF ACCESSIBLE BUILDING ENTRANCE/EGRESS, MUST COMPLY WITH THESE ADA CODE REQUIREMENTS AND ANY SUPPLEMENTAL STATE REQUIREMENTS. THESE INCLUDE, BUT ARE NOT LIMITED TO THE FOLLOWING:

(NOTE: THIS LIST IS NOT INTENDED TO CAPTURE EVERY APPLICABLE FEDERAL, STATE AND LOCAL RULE AND REGULATION. THE CONTRACTOR IS RESPONSIBLE FOR COMPLIANCE WITH THE LAW, WHETHER OR NOT STATED SPECIFICALLY HEREIN:

A. PARKING SPACES AND PARKING AISLES - SLOPE MUST NOT EXCEED 1:48 (1/4" PER FOOT OR NORMALLY 2.0%) IN ANY DIRECTION.

B. CURB RAMPS- SLOPES MUST NOT EXCEED 1:12 (8.3%).

C. LANDINGS

   i. LANDINGS AT CURB RAMPS - MUST BE 4 FT. MIN., X 4 FT. MIN. AND ARE TO BE INCREASED TO 5 FEET WHERE THE LANDING SPACE (TURNING SPACE) IS CONSTRAINED AT THE BACK OF THE SIDEWALK.

   ii. LANDINGS AT RAMPS - MUST BE 5 FT MIN. IN THE DIRECTION OF TRAVEL AND BE PROVIDED AT EACH END OF THE RAMP, MUST PROVIDE POSITIVE DRAINAGE (1 % MIN.), AND MUST NOT EXCEED 1:48 (1/4" PER FOOT OR NORMALLY 2.0%) IN ANY DIRECTION. WHEN LANDING IS ALSO A TURNING SPACE, IT MUST BE A MINIMUM 5 FT X 5 FT.

   iii. LANDINGS AT DOORWAYS - SEE NOTE F BELOW.

D. PATH OF TRAVEL ALONG ON-SITE ACCESSIBLE ROUTE - MUST PROVIDE A 36 INCH (EXCLUDING THE CURB) OR GREATER UNOBSTRUCTED WIDTH OF TRAVEL, (CAR OVERHANGS MUST NOT REDUCE THIS MINIMUM WIDTH). IN A PUBLIC RIGHT-OF-WAY, THE MINIMUM WIDTH EXCLUDING THE CURB IS 4 FT. THE SLOPE MUST BE NO GREATER THAN 1:20 (5.0%) IN THE DIRECTION OF TRAVEL AND MUST NOT EXCEED 1:48 (1/4" PER FOOT OR NORMALLY 2.0%) IN CROSS SLOPE.

E. WHERE PATH OF TRAVEL WILL BE GREATER THAN 1:20 (5.0%), AN ADA RAMP, WITH A MAXIMUM SLOPE OF 1:12 (8.3%), FOR A MAXIMUM RISE OF 30 INCHES, MUST BE PROVIDED. THE RAMP MUST HAVE A MINIMUM. CLEAR WIDTH OF 36 INCHES, HAVE ADA HAND RAILS AND LANDINGS (MIN. 5 FT. LONG IN THE DIRECTION OF TRAVEL) ON EACH END THAT ARE SLOPED A MIN. 1 % AND NO MORE THAN 1:48 (1/4" PER FOOT OR NOMINALLY 2.0%) FOR POSITIVE DRAINAGE.

F. EXTERIOR DOORWAYS - MUST HAVE A "LEVEL" LANDING AREA ON THE EXT

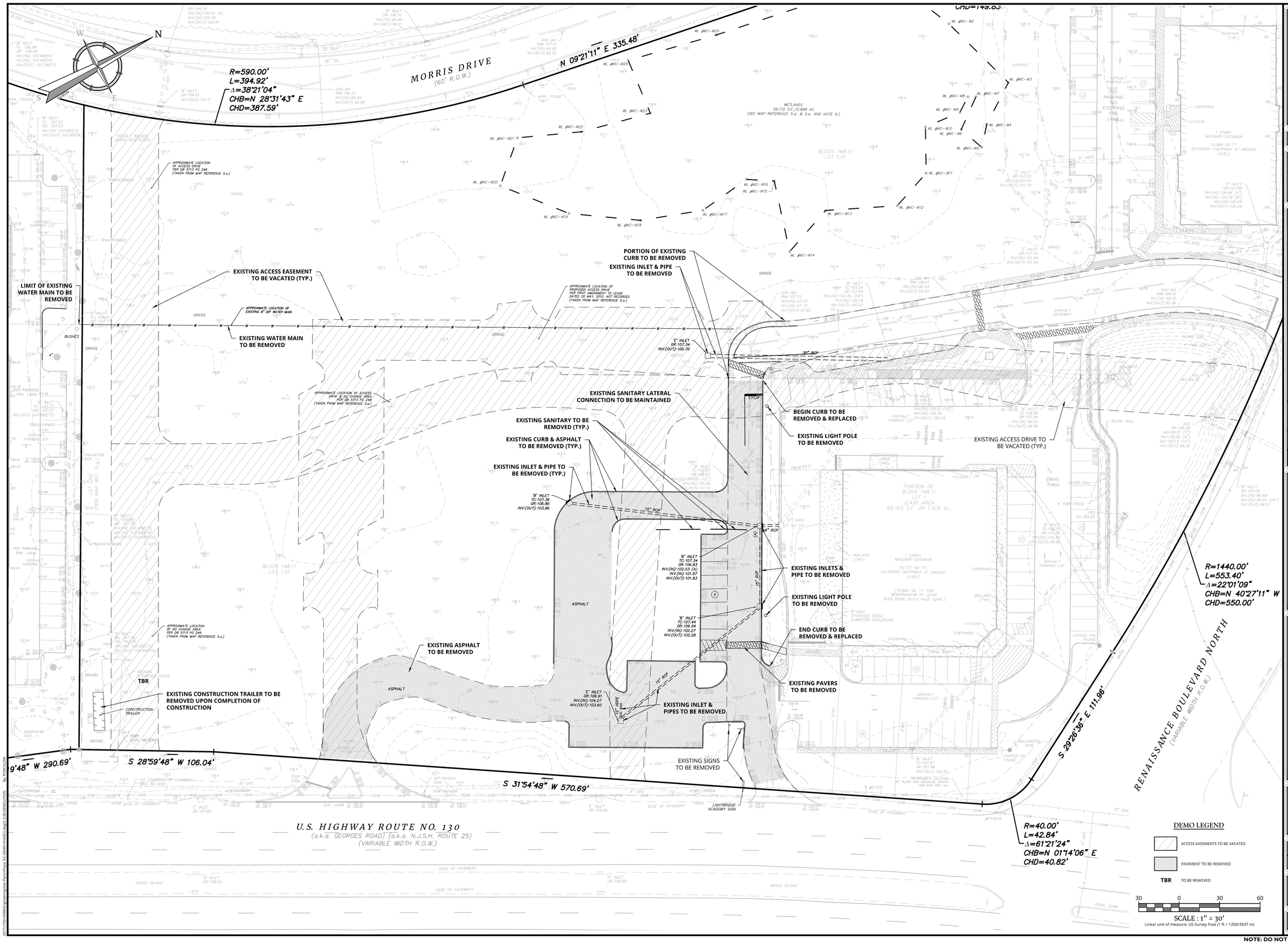

NOTE: DO NOT SCALE DRAWINGS FOR CONSTRUCTION.

Colliers Engineering & Design

www.colliersengineering.com

Copyright © 2025. Colliers Engineering & Design All Rights Reserved. This drawing and all the information contained herein is authorized for use only by the party for whom the services were contracted or to whom it is certified. This drawing may not be copied, reused, disclosed, distributed or relied upon for any other purpose without the express written consent of Colliers Engineering & Design.

Doing Business as MASER CONSULTING

PROTECT YOURSELF
ALL STATES REQUIRE NOTIFICATION OF EXCAVATORS, DESIGNERS, OR ANY PERSON PREPARING TO DISTURB THE EARTH'S SURFACE ANYWHERE IN ANY STATE

FOR STATE SPECIFIC DIRECT PHONE NUMBERS
VISIT: WWW.CALL811.COM

REV	DATE	DRAWN BY	DESCRIPTION
1	7/1/25	MB	REVISED FOR TOWNSHIP SUBMISSION.

Mark Lescavage
2025.07.02 11:27:11 -04'00'

Mark Lescavage
NEW JERSEY LICENSED PROFESSIONAL ENGINEER
LICENSE NUMBER: GE40346
COLLIERS ENGINEERING & DESIGN, INC.
N.J. C.O.A. #: 24GA27986500

PRELIMINARY AND FINAL MAJOR SITE PLAN & MAJOR SUBDIVISION PLAN

FOR

AMARANTH AT NORTH BRUNSWICK PHASES 3 & 4

BLOCK 148, LOT 1.01

TOWNSHIP OF NORTH BRUNSWICK
MIDDLESEX COUNTY
NEW JERSEY

Colliers Engineering & Design
HOLMDEL (Headquarters)
101 Crawfords Corner Road,
Suite 3400
Holmdel, NJ 07733
Phone: 732.383.1950
COLLIERS ENGINEERING & DESIGN, INC. DOING BUSINESS AS MASER CONSULTING

SCALE:	DATE:	DRAWN BY:	CHECKED BY:
AS SHOWN	6/13/2025	RT	AJU
PROJECT NUMBER: 17001949B		DRAWING NAME: C-DEMO-PHASE3	

SHEET TITLE: EXISTING CONDITIONS/DEMOLITION PLAN

SHEET NUMBER: 2.00

2017\17001949B\Engineering\Site Plans\Phase 3\C-DEMO-PHASE3.dwg\C2.00-DEMOLITION By: PCRICHLOW

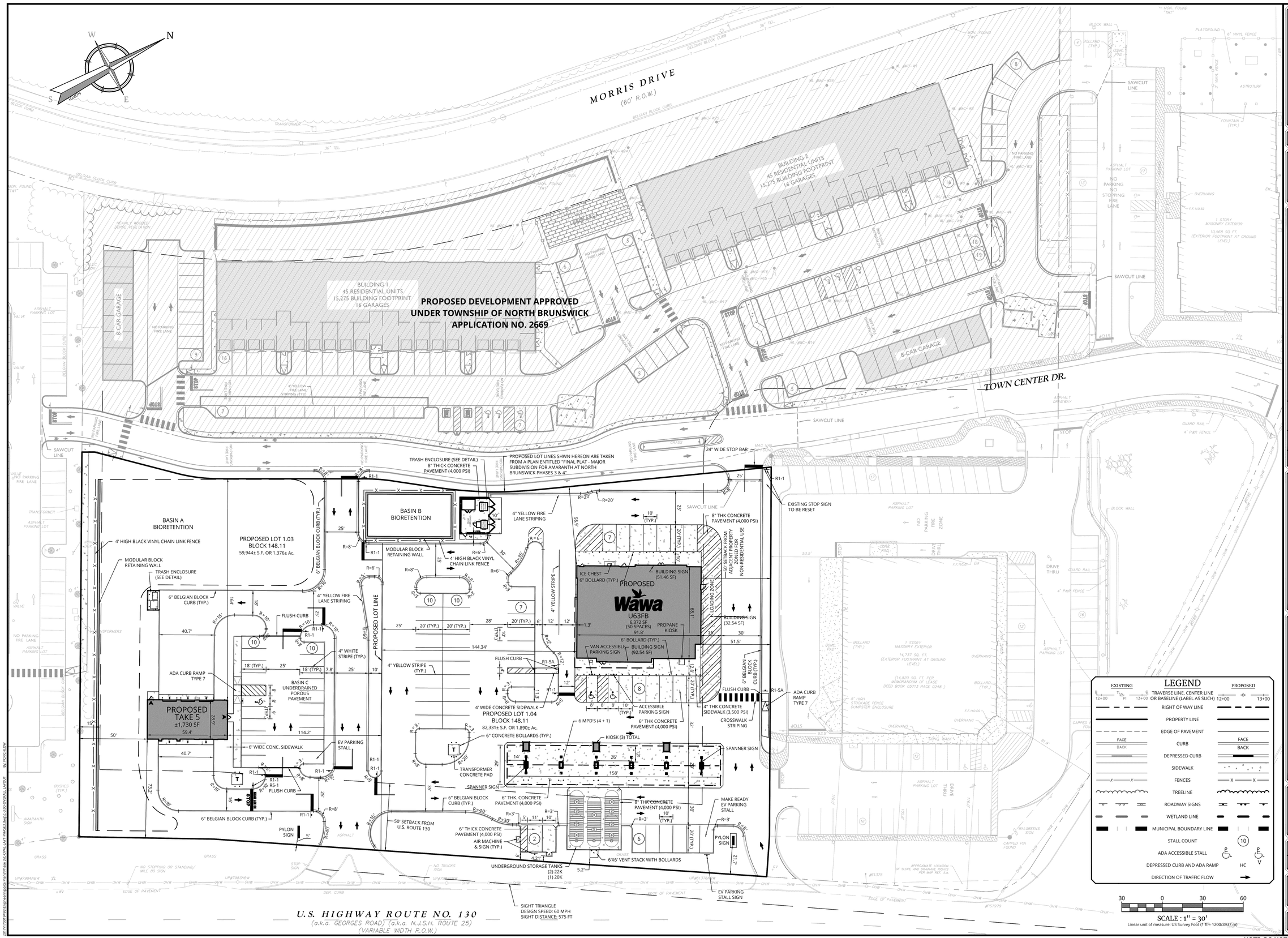

NOTE: DO NOT SCALE DRAWINGS FOR CONSTRUCTION.

Colliers Engineering & Design

www.colliersengineering.com

Copyright © 2025. Colliers Engineering & Design All Rights Reserved. This drawing and all the information contained herein is authorized for use only by the party for whom the services were contracted or to whom it is certified. This drawing may not be copied, reused, disclosed, distributed or relied upon for any other purpose without the express written consent of Colliers Engineering & Design.

Doing Business as MASER CONSULTING

PROTECT YOURSELF
ALL STATES REQUIRE NOTIFICATION OF EXCAVATORS, DESIGNERS, OR ANY PERSON PREPARING TO DISTURB THE EARTH'S SURFACE ANYWHERE IN ANY STATE

811 Know what's below. Call before you dig.

FOR STATE SPECIFIC DIRECT PHONE NUMBERS
VISIT: WWW.CALL811.COM

REV	DATE	DRAWN BY	DESCRIPTION
1	7/1/25	MB	REVISED FOR TOWNSHIP SUBMISSION.

Mark Lescavage
2025.07.02 11:28:09-04'00'

Mark Lescavage
NEW JERSEY LICENSED PROFESSIONAL ENGINEER
LICENSE NUMBER: GE40346
COLLIERS ENGINEERING & DESIGN, INC.
N.J. C.O.A. #: 24GA27986500

PRELIMINARY AND FINAL MAJOR SITE PLAN & MAJOR SUBDIVISION PLAN

FOR

AMARANTH AT NORTH BRUNSWICK PHASES 3 & 4

BLOCK 148, LOT 1.01

TOWNSHIP OF NORTH BRUNSWICK
MIDDLESEX COUNTY
NEW JERSEY

Colliers Engineering & Design
HOLMDEL (Headquarters)
101 Crawfords Corner Road,
Suite 3400
Holmdel, NJ 07733
Phone: 732.383.1950
COLLIERS ENGINEERING & DESIGN, INC. DOING BUSINESS AS MASER CONSULTING

SCALE:	DATE:	DRAWN BY:	CHECKED BY:
AS SHOWN	6/13/2025	RT	AJU

PROJECT NUMBER:	DRAWING NAME:
170019499B	C-OVAL-LAYT-PHASE3

SHEET TITLE:

OVERALL DIMENSION PLAN

SHEET NUMBER:

3.00

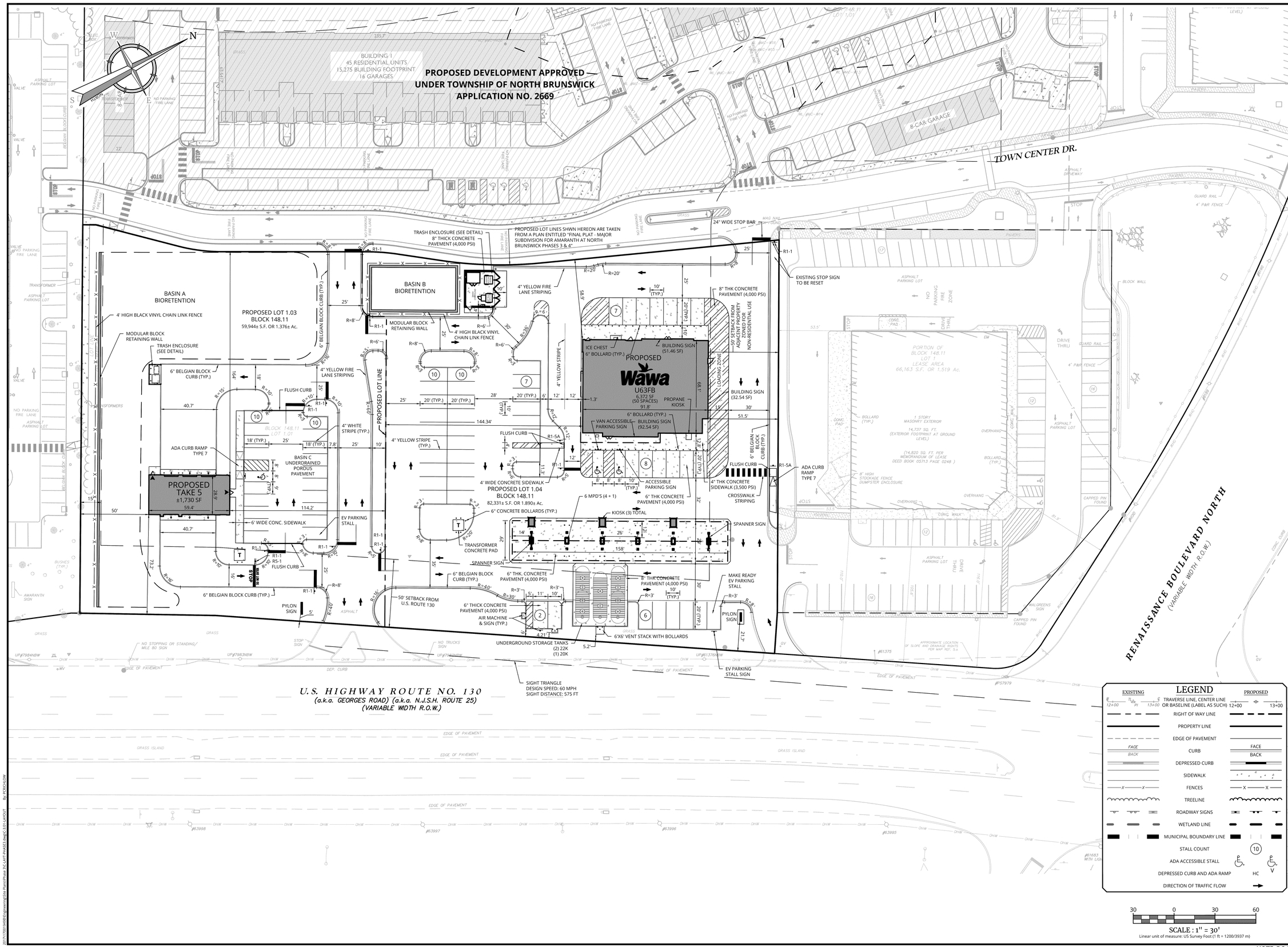

NOTE: DO NOT SCALE DRAWINGS FOR CONSTRUCTION.

Colliers Engineering & Design

www.colliersengineering.com

Copyright © 2025. Colliers Engineering & Design All Rights Reserved. This drawing and all the information contained herein is authorized for use only by the party for whom the services were contracted or to whom it is certified. This drawing may not be copied, reused, disclosed, distributed or relied upon for any other purpose without the express written consent of Colliers Engineering & Design.

Doing Business as MASER CONSULTING

PROTECT YOURSELF
ALL STATES REQUIRE NOTIFICATION OF EXCAVATORS, DESIGNERS, OR ANY PERSON PREPARING TO DISTURB THE EARTH'S SURFACE ANYWHERE IN ANY STATE

FOR STATE SPECIFIC DIRECT PHONE NUMBERS
VISIT: WWW.CALL811.COM

REV	DATE	DRAWN BY	DESCRIPTION
1	7/1/25	MB	REVISED FOR TOWNSHIP SUBMISSION.

Mark Lescavage
2025.07.02 11:29:05-04'00'

Mark Lescavage
NEW JERSEY LICENSED PROFESSIONAL ENGINEER
LICENSE NUMBER: GE40346
COLLIERS ENGINEERING & DESIGN, INC.
N.J. C.O.A. #: 24GA27986500

PRELIMINARY AND FINAL MAJOR SITE PLAN & MAJOR SUBDIVISION PLAN

FOR

AMARANTH AT NORTH BRUNSWICK PHASES 3 & 4

BLOCK 148, LOT 1.01

TOWNSHIP OF NORTH BRUNSWICK
MIDDLESEX COUNTY
NEW JERSEY

Colliers Engineering & Design
HOLMDEL (Headquarters)
101 Crawfords Corner Road,
Suite 3400
Holmdel, NJ 07733
Phone: 732.383.1950
COLLIERS ENGINEERING & DESIGN, INC. DOING BUSINESS AS MASER CONSULTING

SCALE:	DATE:	DRAWN BY:	CHECKED BY:
AS SHOWN	6/13/2025	RT	AJU
PROJECT NUMBER: 17001949B		DRAWING NAME: C-LAYT-PHASE3	

SHEET TITLE:
DIMENSION PLAN

SHEET NUMBER:
3.01

2017\17001949B\Engineering\Site Plans\Phase 3\C-LAYT-PHASE3.dwg\C-3.01 LAYOUT By: PCBICHLOW

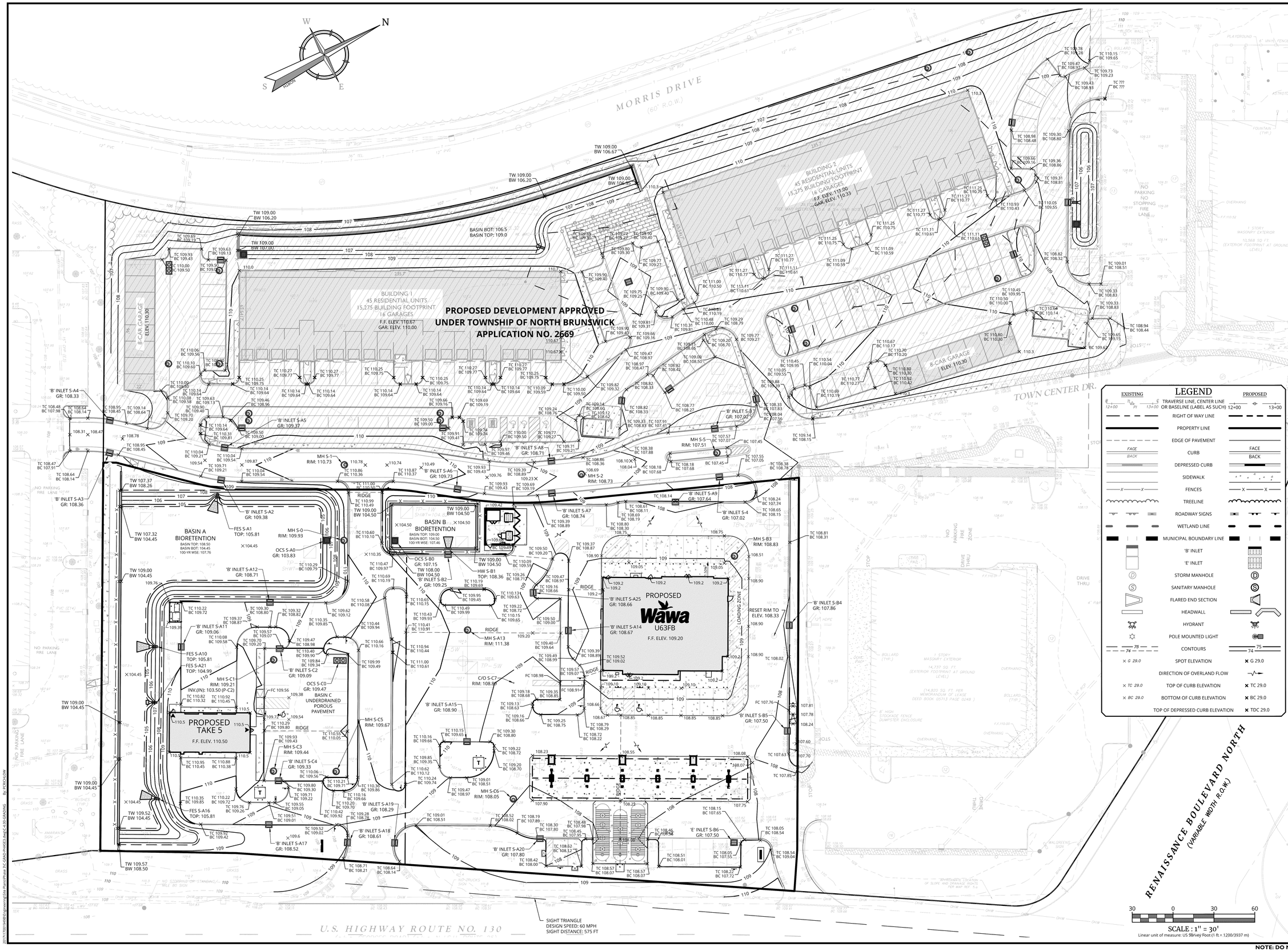

LEGEND

EXISTING		PROPOSED
12+00 PI 13+00	TRAVERSE LINE, CENTER LINE OR BASELINE (LABEL AS SUCH)	12+00 13+00
	RIGHT OF WAY LINE	
	PROPERTY LINE	
	EDGE OF PAVEMENT	
FACE / BACK	CURB	FACE / BACK
	DEPRESSED CURB	
	SIDEWALK	
X X	FENCES	X X
	TREELINE	
	ROADWAY SIGNS	
	WETLAND LINE	
	MUNICIPAL BOUNDARY LINE	
	'B' INLET	
	'E' INLET	
D	STORM MANHOLE	D
S	SANITARY MANHOLE	S
	FLARED END SECTION	
	HEADWALL	
	HYDRANT	
	POLE MOUNTED LIGHT	
75 74	CONTOURS	75 74
× G 29.0	SPOT ELEVATION	× G 29.0
	DIRECTION OF OVERLAND FLOW	
× TC 29.0	TOP OF CURB ELEVATION	× TC 29.0
× BC 29.0	BOTTOM OF CURB ELEVATION	× BC 29.0
	TOP OF DEPRESSED CURB ELEVATION	× TDC 29.0

Colliers
Engineering & Design

www.colliersengineering.com

Copyright © 2025. Colliers Engineering & Design All Rights Reserved. This drawing and all the information contained herein is authorized for use only by the party for whom the services were contracted or to whom it is certified. This drawing may not be copied, reused, disclosed, distributed or relied upon for any other purpose without the express written consent of Colliers Engineering & Design.

Doing Business as MASER CONSULTING

811 Know what's below. Call before you dig.

PROTECT YOURSELF
ALL STATES REQUIRE NOTIFICATION OF EXCAVATORS, DESIGNERS, OR ANY PERSON PREPARING TO DISTURB THE EARTH'S SURFACE ANYWHERE IN ANY STATE

FOR STATE SPECIFIC DIRECT PHONE NUMBERS
VISIT: WWW.CALL811.COM

REV	DATE	DRAWN BY	DESCRIPTION
1	7/1/25	MB	REVISED FOR TOWNSHIP SUBMISSION.

Mark Lescavage
2025.07.02 11:29:46-04'00'

Mark Lescavage
NEW JERSEY LICENSED PROFESSIONAL ENGINEER
LICENSE NUMBER: GE40346
COLLIERS ENGINEERING & DESIGN, INC.
N.J. C.O.A. #: 24GA27986500

PRELIMINARY AND FINAL MAJOR SITE PLAN & MAJOR SUBDIVISION PLAN
FOR
AMARANTH AT NORTH BRUNSWICK PHASES 3 & 4

BLOCK 148, LOT 1.01

TOWNSHIP OF NORTH BRUNSWICK
MIDDLESEX COUNTY
NEW JERSEY

Colliers Engineering & Design
HOLMDEL (Headquarters)
101 Crawfords Corner Road, Suite 3400
Holmdel, NJ 07733
Phone: 732.383.1950
COLLIERS ENGINEERING & DESIGN, INC. DOING BUSINESS AS MASER CONSULTING

SCALE:	DATE:	DRAWN BY:	CHECKED BY:
AS SHOWN	6/13/2025	RT	AJU

PROJECT NUMBER:	DRAWING NAME:
170019498	C-GRAD-PHASE3

SHEET TITLE:
GRADING PLAN

SHEET NUMBER:
4.0

NOTE: DO NOT SCALE DRAWINGS FOR CONSTRUCTION.

2017\170019498\Engineering\Site Plans\Phase 3\C-GRAD-PHASE3.dwg\C-4.00-GRADING By: PCRICHLOW

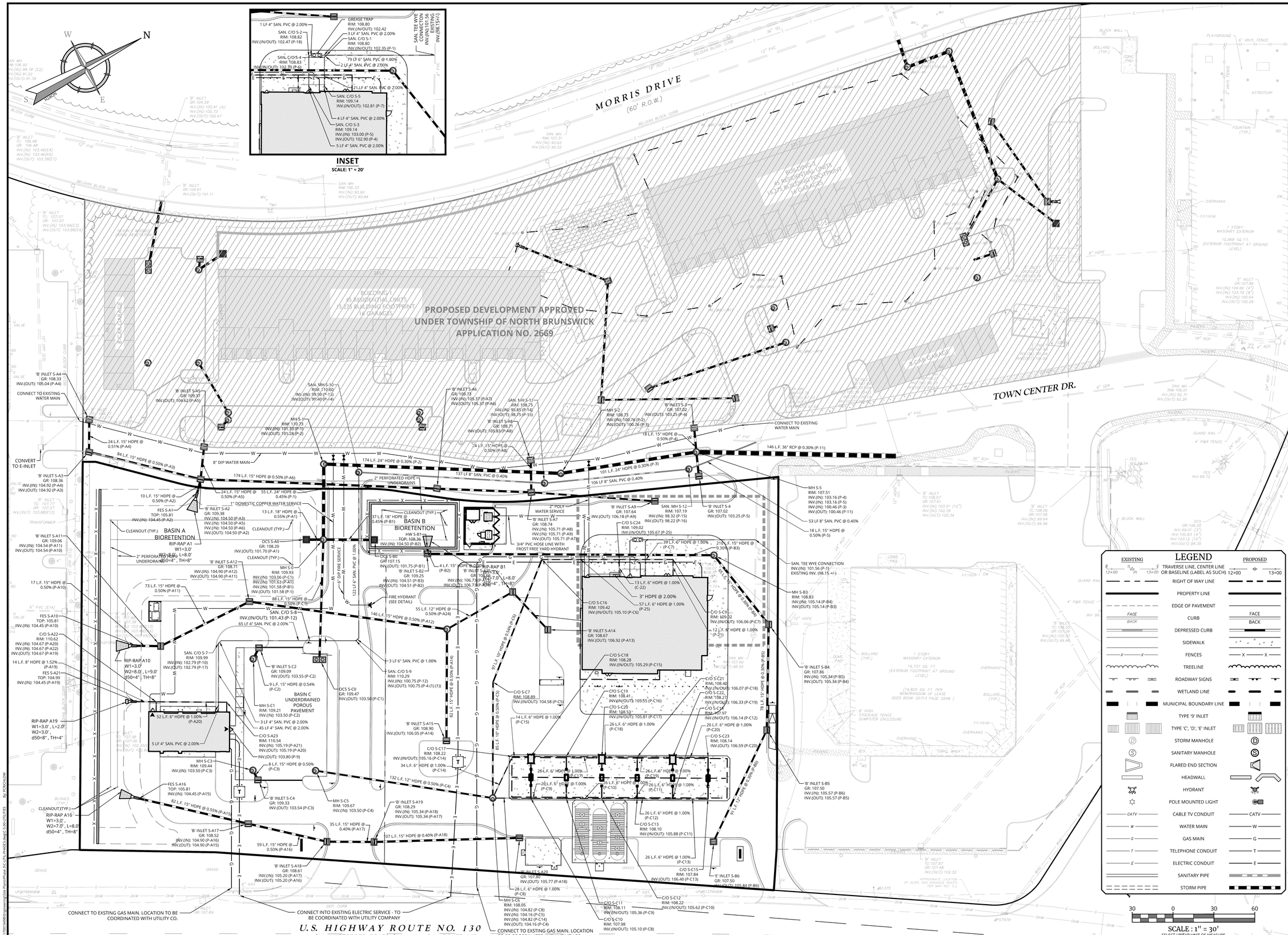

NOTE: DO NOT SCALE DRAWINGS FOR CONSTRUCTION.

Colliers Engineering & Design

www.colliersengineering.com

Copyright © 2025. Colliers Engineering & Design All Rights Reserved. This drawing and all the information contained herein is authorized for use only by the party for whom the services were contracted or to whom it is certified. This drawing may not be copied, reused, disclosed, distributed or relied upon for any other purpose without the express written consent of Colliers Engineering & Design.

Doing Business as MASER CONSULTING

PROTECT YOURSELF
ALL STATES REQUIRE NOTIFICATION OF EXCAVATORS, DESIGNERS, OR ANY PERSON PREPARING TO DISTURB THE EARTH'S SURFACE ANYWHERE IN ANY STATE

FOR STATE SPECIFIC DIRECT PHONE NUMBERS
VISIT: WWW.CALL811.COM

REV	DATE	DRAWN BY	DESCRIPTION
1	7/1/25	MB	REVISED FOR TOWNSHIP SUBMISSION.

Mark Lescavage
2025.07.02 11:30:53-04'00'

Mark Lescavage
NEW JERSEY LICENSED PROFESSIONAL ENGINEER
LICENSE NUMBER: GE40346
COLLIERS ENGINEERING & DESIGN, INC.
N.J. C.O.A. #: 24GA27986500

PRELIMINARY AND FINAL MAJOR SITE PLAN & MAJOR SUBDIVISION PLAN
FOR
AMARANTH AT NORTH BRUNSWICK PHASES 3 & 4

BLOCK 148, LOT 1.01

TOWNSHIP OF NORTH BRUNSWICK
MIDDLESEX COUNTY
NEW JERSEY

Colliers Engineering & Design

HOLMDEL (Headquarters)
101 Crawfords Corner Road, Suite 3400
Holmdel, NJ 07733
Phone: 732.383.1950
COLLIERS ENGINEERING & DESIGN, INC. DOING BUSINESS AS MASER CONSULTING

SCALE:	DATE:	DRAWN BY:	CHECKED BY:
AS SHOWN	6/13/2025	RT	AJU

PROJECT NUMBER: 170019498
DRAWING NAME: C-UTIL-PHASE3

SHEET TITLE:
UTILITIES PLAN

SHEET NUMBER:
5.00

2017\170019498\Engineering\Site Plan\Phase 3\C-UTIL-PHASE3.dwg\C-5.00-UTILITIES By: PCBICHLOW

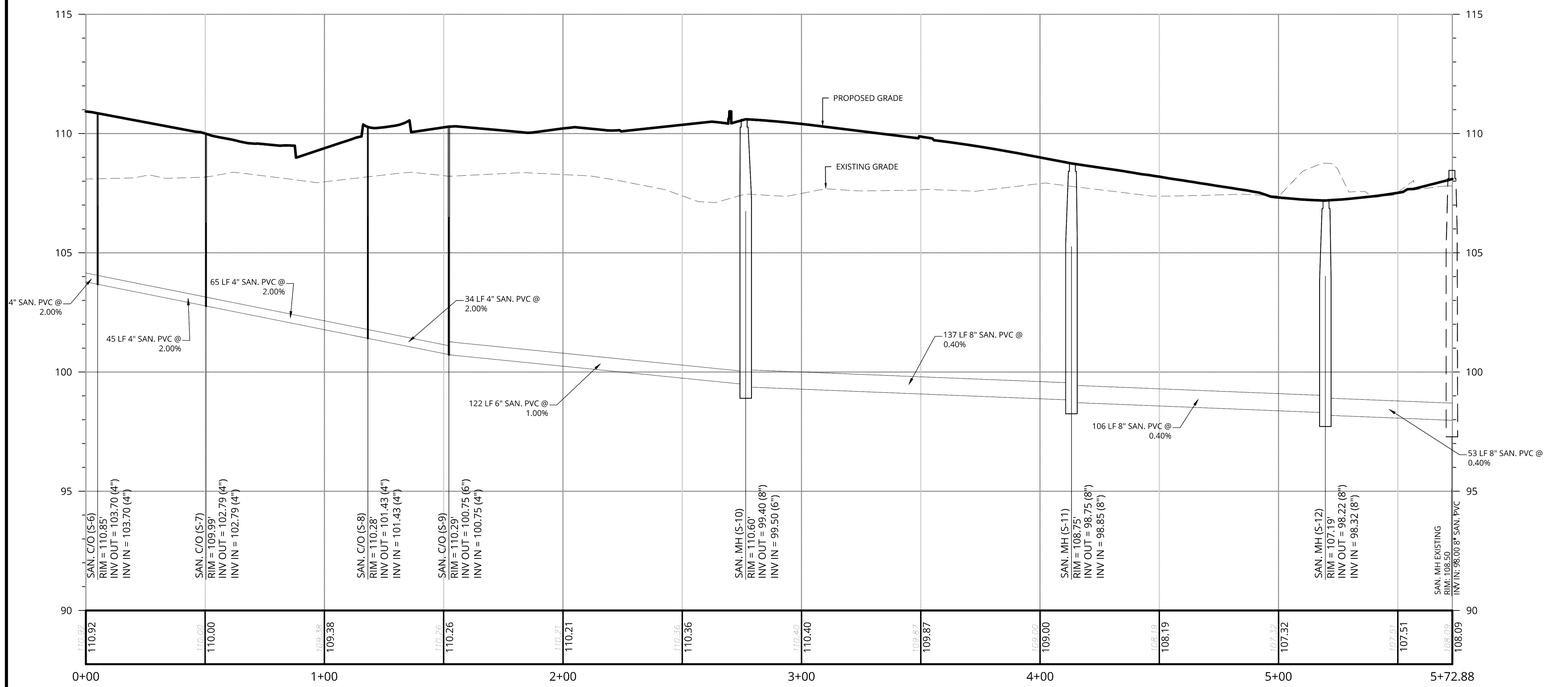

PROFILE OF ALIGNMENT - (SANITARY SEWER) - (1)
HORIZONTAL : 1" = 30'
VERTICAL : 1" = 3'

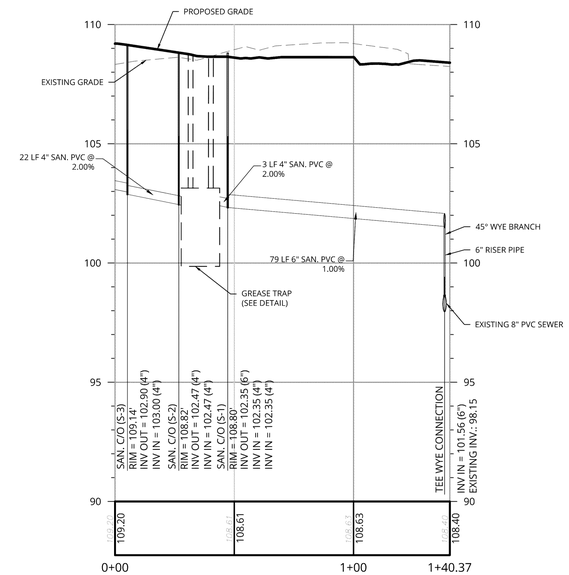

PROFILE OF ALIGNMENT - (SANITARY SEWER) - (2)
HORIZONTAL : 1" = 30'
VERTICAL : 1" = 3'

Colliers Engineering & Design

www.colliersengineering.com

Copyright © 2025. Colliers Engineering & Design All Rights Reserved. This drawing and all the information contained herein is authorized for use only by the party for whom the services were contracted or to whom it is certified. This drawing may not be copied, reused, disclosed, distributed or relied upon for any other purpose without the express written consent of Colliers Engineering & Design.

Doing Business as MASER CONSULTING

PROTECT YOURSELF
ALL STATES REQUIRE NOTIFICATION OF EXCAVATORS, DESIGNERS, OR ANY PERSON PREPARING TO DISTURB THE EARTH'S SURFACE ANYWHERE IN ANY STATE

811 Know what's below. Call before you dig.

FOR STATE SPECIFIC DIRECT PHONE NUMBERS VISIT: WWW.CALL811.COM

REV	DATE	DRAWN BY	DESCRIPTION
1	7/1/25	MB	REVISED FOR TOWNSHIP SUBMISSION.

Mark Lescavage
2025.07.02 11:31:45-04'00'

Mark Lescavage
NEW JERSEY LICENSED PROFESSIONAL ENGINEER
LICENSE NUMBER: GE40346
COLLIERS ENGINEERING & DESIGN, INC.
N.J. C.O.A. #: 24GA27986500

PRELIMINARY AND FINAL MAJOR SITE PLAN & MAJOR SUBDIVISION PLAN

FOR

AMARANTH AT NORTH BRUNSWICK PHASES 3 & 4

BLOCK 148, LOT 1.01

TOWNSHIP OF NORTH BRUNSWICK
MIDDLESEX COUNTY
NEW JERSEY

Colliers Engineering & Design
HOLMDEL (Headquarters)
101 Crawfords Corner Road, Suite 3400
Holmdel, NJ 07733
Phone: 732.383.1950
COLLIERS ENGINEERING & DESIGN, INC. DOING BUSINESS AS MASER CONSULTING

SCALE:	DATE:	DRAWN BY:	CHECKED BY:
AS SHOWN	6/13/2025	RT	AJU

PROJECT NUMBER: 17001949B
DRAWING NAME: C-PROF-PHASE3

SHEET TITLE: PROFILES

SHEET NUMBER: 6.00

NOTE: DO NOT SCALE DRAWINGS FOR CONSTRUCTION.

2017\17001949B\Engineering\Site Plans\Phase 3\C-PROF-PHASE3.dwg\C-6.00-PROFILES By: PCRICHLOW

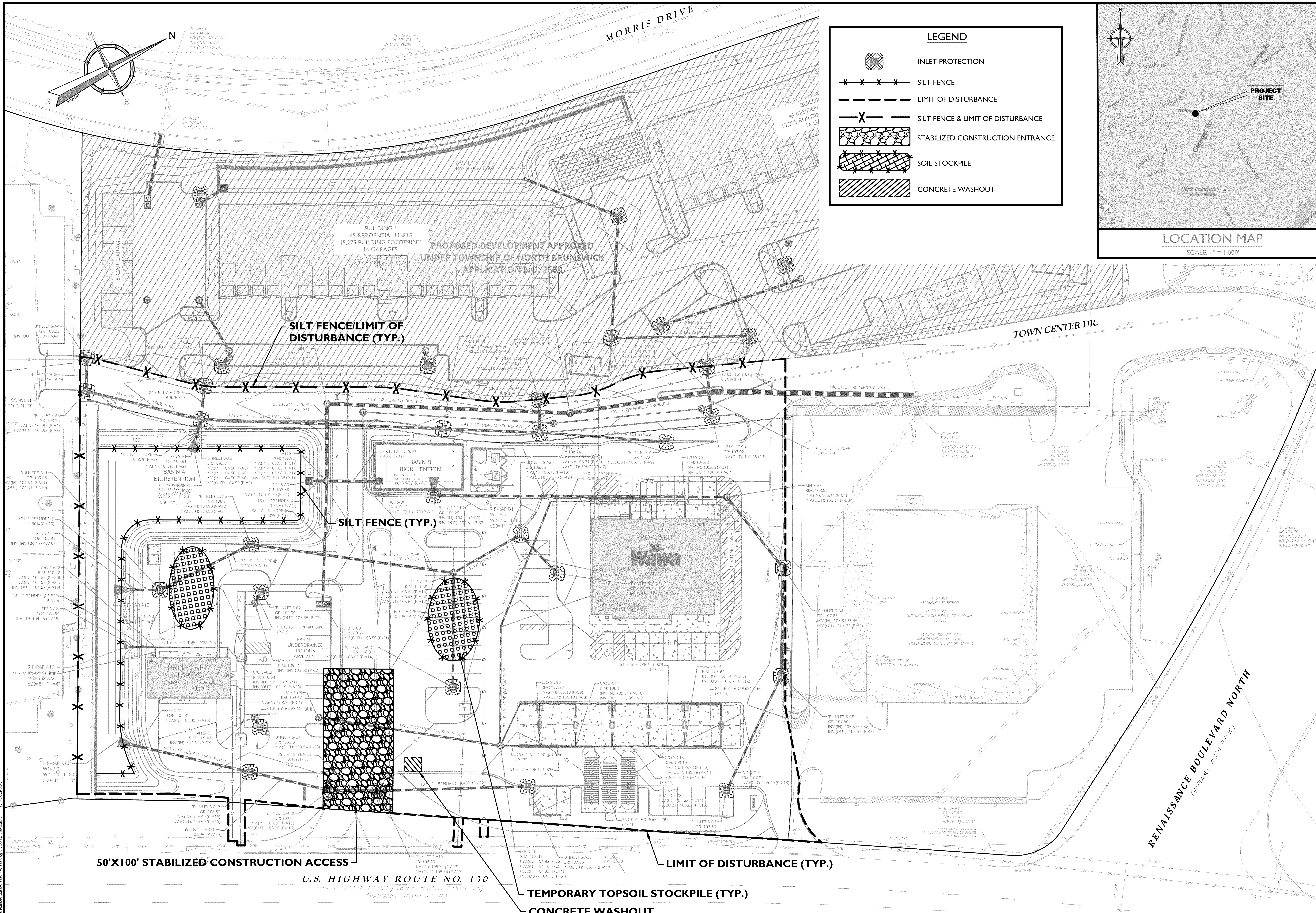

THIS PLAN IS FOR SOIL EROSION AND SEDIMENT CONTROL PURPOSES ONLY
TOTAL LIMIT OF DISTURBANCE = 158,420± S.F. (3.64± ACRES)

30 0 30 60
SCALE : 1" = 30'
Linear unit of measure: US Survey Foot (1 ft = 1200/3937 m)

Colliers
Engineering & Design
www.colliersengineering.com

Copyright © 2025. Colliers Engineering & Design All Rights Reserved. This drawing and all the information contained herein is authorized for use only by the party for whom the services were contracted or to whom it is certified. This drawing may not be copied, reused, disclosed, distributed or relied upon for any other purpose without the express written consent of Colliers Engineering & Design.

Doing Business as MASER CONSULTING

811 Know what's below. Call before you dig.
PROTECT YOURSELF
ALL STATES REQUIRE NOTIFICATION OF EXCAVATORS, DESIGNERS, OR ANY PERSON PREPARING TO DISTURB THE EARTH'S SURFACE ANYWHERE IN ANY STATE
FOR STATE SPECIFIC DIRECT PHONE NUMBERS VISIT: WWW.CALL811.COM

REV	DATE	DRAWN BY	DESCRIPTION
1	7/1/25	MB	REVISED FOR TOWNSHIP SUBMISSION.

Mark Lescavage
2025.07.02 11:32:47-04'00'

Mark Lescavage
NEW JERSEY LICENSED PROFESSIONAL ENGINEER
LICENSE NUMBER: GE40346
COLLIERS ENGINEERING & DESIGN, INC.
N.J. C.O.A. #: 24GA27986500

PRELIMINARY AND FINAL MAJOR SITE PLAN & MAJOR SUBDIVISION PLAN
FOR
AMARANTH AT NORTH BRUNSWICK PHASES 3 & 4

BLOCK 148, LOT 1.01

TOWNSHIP OF NORTH BRUNSWICK
MIDDLESEX COUNTY
NEW JERSEY

Colliers Engineering & Design
HOLMDEL (Headquarters)
101 Crawfords Corner Road,
Suite 3400
Holmdel, NJ 07733
Phone: 732.383.1950
COLLIERS ENGINEERING & DESIGN, INC. DOING BUSINESS AS MASER CONSULTING

SCALE:	DATE:	DRAWN BY:	CHECKED BY:
AS SHOWN	6/13/2025	RT	AJU
PROJECT NUMBER: 17001949B	DRAWING NAME: C-SESC-PHASE3		

SHEET TITLE:
SOIL EROSION & SEDIMENT CONTROL PLAN

SHEET NUMBER:
7.00

NOTE: DO NOT SCALE DRAWINGS FOR CONSTRUCTION.

FREEHOLD SOIL CONSERVATION DISTRICT NOTES

EFFECTIVENAME 05/01/17

1. THE FREEHOLD SOIL CONSERVATION DISTRICT SHALL BE NOTIFIED FORTY-EIGHT (48) HOURS IN ADVANCE OF ANY SOIL DISTURBING ACTIVITY.
2. ALL SOIL EROSION AND SEDIMENT CONTROL PRACTICES ARE TO BE INSTALLED PRIOR TO SOIL DISTURBANCE, OR IN THEIR PROPER SEQUENCE, AND MAINTAINED UNTIL PERMANENT PROTECTION IS ESTABLISHED.
3. ANY CHANGES TO THE CERTIFIED SOIL EROSION AND SEDIMENT CONTROL PLANS WILL REQUIRE THE SUBMISSION OF REVISED SOIL EROSION AND SEDIMENT CONTROL PLANS TO THE DISTRICT FOR RE-CERTIFICATION. THE REVISED PLANS MUST MEET ALL CURRENT STATE SOIL EROSION AND SEDIMENT CONTROL STANDARDS.
4. N.J.S.A 4:24-39 ET. SEQ. REQUIRES THAT NO CERTIFICATES OF OCCUPANCY BE ISSUED BEFORE THE DISTRICT DETERMINES THAT A PROJECT OR PORTION THEREOF IS IN FULL COMPLIANCE WITH THE CERTIFIED PLAN AND STANDARDS FOR SOIL EROSION AND SEDIMENT CONTROL IN NEW JERSEY AND A REPORT OF COMPLIANCE HAS BEEN ISSUED. UPON WRITTEN REQUEST FROM THE APPLICANT, THE DISTRICT MAY ISSUE A REPORT OF COMPLIANCE WITH CONDITIONS ON A LOT-BY-LOT OR SECTION-BY-SECTION BASIS, PROVIDED THAT THE PROJECT OR PORTION THEREOF IS IN SATISFACTORY COMPLIANCE WITH THE SEQUENCE OF DEVELOPMENT AND TEMPORARY MEASURES FOR SOIL EROSION AND SEDIMENT CONTROL HAVE BEEN IMPLEMENTED, INCLUDING PROVISIONS FOR STABILIZATION AND SITE WORK.
5. ANY STOCKPILE OR DISTURBED AREAS THAT WILL BE LEFT EXPOSED MORE THAN **FOURTEEN (14) DAYS**, AND NOT SUBJECT TO CONSTRUCTION TRAFFIC, WILL IMMEDIATELY RECEIVE A TEMPORARY SEEDING. IF THE SEASON PREVENTS THE ESTABLISHMENT OF TEMPORARY COVER, THE DISTURBED AREAS WILL BE MULCHED WITH STRAW, OR EQUIVALENT MATERIAL, AT A RATE OF 2 TO 3 TONS PER ACRE, ACCORDING TO THE STANDARD FOR STABILIZATION WITH MULCH ONLY.
6. IMMEDIATELY FOLLOWING INITIAL DISTURBANCE OR ROUGH GRADING, ALL CRITICAL AREAS SUBJECT TO EROSION (I.E. SOIL STOCKPILES, STEEP SLOPES AND ROADWAY EMBANKMENTS) WILL RECEIVE TEMPORARY SEEDING IN COMBINATION WITH STRAW MULCH OR A SUITABLE EQUIVALENT, AND A MULCH ANCHOR, IN ACCORDANCE WITH STATE STANDARDS.
7. A SUB-BASE COURSE WILL BE APPLIED IMMEDIATELY FOLLOWING ROUGH GRADING AND INSTALLATION OF IMPROVEMENTS TO STABILIZE STREETS, ROADS, DRIVEWAYS, AND PARKING AREAS. IN AREAS WHERE NO UTILITIES ARE PRESENT, THE SUB-BASE SHALL BE INSTALLED WITHIN FIFTEEN (15) DAYS OF THE PRELIMINARY GRADING.
8. THE STANDARD FOR STABILIZED CONSTRUCTION ACCESS REQUIRES THE INSTALLATION OF A PAD OF CLEAN CRUSHED STONE AT PRIMARY TRAFFIC WILL BE ACCESSING THE CONSTRUCTION SITE. AFTER INTERIOR ROADWAYS ARE PAVED, INDIVIDUAL LOTS REQUIRE A STABILIZED CONSTRUCTION ACCESS CONSISTING OF ONE INCH TO TWO INCH (1" - 2") STONE FOR A MINIMUM LENGTH OF TEN FEET (10') EQUAL TO THE LOT ENTRANCE WIDTH. ALL OTHER ACCESS POINTS SHALL BE BLOCKED OFF.
9. ALL SOIL WASHED, DROPPED, SPILLED, OR TRACKED OUTSIDE THE LIMIT OF DISTURBANCE ON ORTO PUBLIC RIGHT-OF-WAYS WILL BE REMOVED IMMEDIATELY.
10. PERMANENT VEGETATION IS TO BE SEEDED OR SODDED ON ALL EXPOSED AREAS WITHIN TEN (10) DAYS AFTER FINAL GRADING.
11. AT THE TIME THAT SITE PREPARATION FOR PERMANENT VEGETATIVE STABILIZATION IS GOING TO BE ACCOMPLISHED, ANY SOIL THAT WILL NOT PROVIDE A SUITABLE ENVIRONMENT TO SUPPORT ADEQUATE VEGETATIVE GROUND COVER SHALL BE REMOVED OR TREATED IN SUCH A WAY THAT IT WILL PERMANENTLY ADJUST THE SOIL CONDITIONS AND RENDER IT SUITABLE FOR VEGETATIVE GROUND COVER. IF THE REMOVAL OR TREATMENT OF THE SOIL WILL NOT PROVIDE SUITABLE CONDITIONS, NON-VEGETATIVE MEANS OF PERMANENT GROUND STABILIZATION WILL HAVE TO BE EMPLOYED.
12. IN ACCORDANCE WITH THE STANDARD FOR MANAGEMENT OF HIGH ACID PRODUCING SOILS, ANY SOIL HAVING A PH OF 4 OR LESS OR CONTAINING IRON SULFIDES SHALL BE ULTIMATELY PLACED OR BURIED WITH LIMESTONE APPLIED AT THE RATE OF 10 TONS/ACRE, (OR 450 LBS/1,000 SQ FT OF SURFACE AREA) AND COVERED WITH A MINIMUM OF 12" OF SETTLED SOIL WITH A PH OF 5 OR MORE, OR 24" WHERE TREES OR SHRUBS ARE TO BE PLANTED.
13. CONDUIT OUTLET PROTECTION MUST BE INSTALLED AT ALL REQUIRED OUTFALLS PRIOR TO THE DRAINAGE SYSTEM BECOMING OPERATIONAL.
14. UNFILTERED DEWATERING IS NOT PERMITTED. NECESSARY PRECAUTIONS MUST BE TAKEN DURING ALL DEWATERING OPERATIONS TO MINIMIZE SEDIMENT TRANSFER. ANY DEWATERING METHODS USED MUST BE IN ACCORDANCE WITH THE STANDARD FOR DEWATERING.
15. SHOULD THE CONTROL OF DUST AT THE SITE BE NECESSARY, THE SITE WILL BE SPRINKLED UNTIL THE SURFACE IS WET, TEMPORARY VEGETATIVE COVER SHALL BE ESTABLISHED OR MULCH SHALL BE APPLIED AS REQUIRED BY THE STANDARD FOR DUST CONTROL.
16. STOCKPILE AND STAGING LOCATIONS ESTABLISHED IN THE FIELD SHALL BE PLACED WITHIN THE LIMIT OF DISTURBANCE ACCORDING TO THE CERTIFIED PLAN. STAGING AND STOCKPILES NOT LOCATED WITHIN THE LIMIT OF DISTURBANCE WILL REQUIRE CERTIFICATION OF A REVISED SOIL EROSION AND SEDIMENT CONTROL PLAN. CERTIFICATION OF A NEW SOIL EROSION AND SEDIMENT CONTROL PLAN MAY BE REQUIRED FOR THESE ACTIVITIES IF AN AREA GREATER THAN 5,000 SQUARE FEET IS DISTURBED.
17. ALL SOIL STOCKPILES ARE TO BE TEMPORARILY STABILIZED IN ACCORDANCE WITH SOIL EROSION AND SEDIMENT CONTROL NOTE #6.
18. THE PROPERTY OWNER SHALL BE RESPONSIBLE FOR ANY EROSION OR SEDIMENTATION THAT MAY OCCUR BELOW STORMWATER OUTFALLS OR OFFSITE AS A RESULT OF CONSTRUCTION OF THE PROJECT.

FREEHOLD SOIL CONSERVATION DISTRICT
4000 KOZLOSKI ROAD, FREEHOLD, NJ 07728-5033,
PHONE (732) 683-8500, FAX (732) 683-9140,
EMAIL: INFO@FREEHOLDSCD.ORG.

SEQUENCE OF COMMERCIAL CONSTRUCTION

MCNJ-SOIL-NOTE-1500 05/01/18

1. CLEARING OF ENTRANCE AND LIMIT OF DISTURBANCE FOR INSTALLATION OF SILT FENCE AND CONSTRUCTION ENTRANCE PAD (1 WEEK).
2. CLEARING AND ROUGH GRADING (2 WEEKS)
3. CONSTRUCTION OF STORM WATER BASIN (2 WEEKS)
4. INSTALL STORM DRAINAGE SYSTEM, CONDUIT OUTLET PROTECTION AND ALL OTHER UTILITIES. INSTALL INLET PROTECTION (3 WEEKS)
5. CONSTRUCT CURBS AND PLACE ROAD SUBBASE (2 WEEKS).
6. CLEAR AND GRADE BUILDING AREAS AND CONSTRUCT BUILDINGS. ALL DISTURBED AREAS SHALL BE STABILIZED AS DEFINED IN SOIL EROSION AND SEDIMENT CONTROL NOTES. (ONGOING FROM COMMENCEMENT OF PROJECT).
7. ESTABLISH FINISH GRADES. CONDUCT SOIL COMPACTION TESTING AS REQUIRED, OR SCARIFY/TILL 6" MINIMUM DEPTH OF SUBSOIL IN THE LANDSCAPED AND LAWN AREA. (2 WEEKS)
8. ALL SURFACES HAVING LAWN OR LANDSCAPING AS FINAL COVER ARE TO BE PROVIDED 5" OF TOPSOIL, FIRM IN PLACE. PRIOR TO SEEDING, SODDING OR PLANTING, PLACE PERMANENT VEGETATION COVER. (1 WEEK)
9. PAVE ROADS AND COMPLETE FINAL LANDSCAPING (1 MONTH)
10. REMOVE TEMPORARY ACCESS PROTECTION, SILT FENCE, AND INLET PROTECTION AFTER ALL DISTURBED AREAS HAVE BEEN STABILIZED.

STANDARD FOR VEGETATIVE COVER

MCNJ-SOIL-NOTE-1100 MOD: 04/07/25 12/01/17

I. SITE PREPARATION

A. GRADE AS NEEDED AND FEASIBLE TO PERMIT THE USE OF CONVENTIONAL EQUIPMENT FOR SEEDBED PREPARATION, SEEDING, MULCH APPLICATION, AND MULCH ANCHORING. ALL GRADING SHOULD BE DONE IN ACCORDANCE WITH STANDARD FOR LAND GRADING.

B. IMMEDIATELY PRIOR TO SEEDING AND TOPSOIL APPLICATION, THE SUBSOIL SHALL BE EVALUATED FOR COMPACTION IN ACCORDANCE WITH THE STANDARD FOR LAND GRADING.

C. TOPSOIL SHOULD BE HANDLED ONLY WHEN IT IS DRY ENOUGH TO WORK WITHOUT DAMAGING THE SOIL STRUCTURE. A UNIFORM APPLICATION TO A DEPTH OF 5 INCHES (UNSETTLED) IS REQUIRED ON ALL SITES. TOPSOIL SHALL BE AMENDED WITH ORGANIC MATTER, AS NEEDED, IN ACCORDANCE WITH THE STANDARD FOR TOPSOILING.

D. INSTALL NEEDED EROSION CONTROL PRACTICES OR FACILITIES SUCH AS DIVERSIONS, GRADE-STABILIZATION STRUCTURES, CHANNEL STABILIZATION MEASURES, SEDIMENT BASINS, AND WATERWAYS.

2. SEEDBED PREPARATION

A. UNIFORMLY APPLY GROUND LIMESTONE AND FERTILIZER TO TOPSOIL WHICH HAS BEEN SPREAD AND FIRMED, ACCORDING TO SITE SPECIFIC SOIL TEST RECOMMENDATIONS SUCH AS OFFERED BY RUTGERS CO-OPERATIVE EXTENSION. SOIL SAMPLE MAILERS ARE AVAILABLE FROM THE LOCAL RUTGERS COOPERATIVE EXTENSION OFFICES (HTTP://NJAES.RUTGERS.EDU/COUNTY/).

a. FOR TEMPORARY SEEDING: FERTILIZER SHALL BE APPLIED AT THE RATE OF 500 POUNDS PER ACRE OR 11 POUNDS PER 1,000 SQUARE FEET OF 10-20-10 OR EQUIVALENT WITH 50% WATER INSOLUBLE NITROGEN UNLESS A SOIL TEST INDICATES OTHERWISE. LIMING RATE SHALL BE ESTABLISHED PER SOIL TESTING.

b. FOR PERMANENT SEEDING: FERTILIZER SHALL BE APPLIED AT THE RATE OF 500 POUNDS PER ACRE OR 11 POUNDS PER 1,000 SQUARE FEET OF 10-10-10 OR EQUIVALENT WITH 50% WATER INSOLUBLE NITROGEN UNLESS A SOIL TEST INDICATES OTHERWISE AND INCORPORATED INTO THE SURFACE 4 INCHES. IF FERTILIZER IS NOT INCORPORATED, APPLY ONE-HALF THE RATE DESCRIBED ABOVE DURING SEEDBED PREPARATION AND REPEAT ANOTHER ONE-HALF RATE APPLICATION OF THE SAME FERTILIZER WITHIN 3 TO 5 WEEKS AFTER SEEDING.

B. WORK LIME AND FERTILIZER INTO THE TOPSOIL AS NEARLY AS PRACTICAL TO A DEPTH OF 4 INCHES WITH A DISC, SPRING-TOOTH HARROW, OR OTHER SUITABLE EQUIPMENT. THE FINAL HARROWING OR DISKING OPERATION SHOULD BE ON THE GENERAL CONTOUR. CONTINUE TILLAGE UNTIL A REASONABLE UNIFORM SEEDBED IS PREPARED.

C. HIGH ACID PRODUCING SOIL SOILS HAVING A PH OF 4 OR LESS OR CONTAINING IRON SULFIDE SHALL BE COVERED WITH A MINIMUM OF 12 INCHES OF SOIL HAVING A PH OF 5 OR MORE BEFORE INITIATING SEEDBED REPARATION. SEE STANDARD FOR MANAGEMENT OF HIGH ACID-PRODUCING SOILS FOR SPECIFIC REQUIREMENTS.

D. IMMEDIATELY PRIOR TO SEEDING AND TOPSOIL APPLICATION, THE SURFACE SHOULD BE SCARIFIED 6" TO 12" WHERE THERE HAS BEEN SOIL COMPACTION. THIS PRACTICE IS PERMISSIBLE ONLY WHERE THERE IS NO DANGER TO UNDERGROUND UTILITIES (CABLES, IRRIGATION SYSTEMS, ETC.)

E. REMOVE FROM THE SURFACE ALL STONES 2 INCHES OR LARGER IN ANY DIMENSION AND OTHER DEBRIS SUCH AS WIRE, TREE ROOTS, PIECES OF CONCRETE, CLODS, LUMPS OR OTHER UNSUITABLE MATERIAL.

3. SEEDING

A. TEMPORARY SEEDING SPECIFICATIONS - TEMPORARY VEGETATIVE COVER SHALL CONSIST OF PERENNIAL RYEGRASS APPLIED UNIFORMLY AT A RATE OF 1.0 POUNDS PER 1,000 SQ.FT. (100 LBS/ACRE). OR A MIXTURE FROM TABLE 7-2 OF THE STANDARDS APPROVED BY THE SOIL CONSERVATION DISTRICT.

B. PERMANENT SEEDING SPECIFICATIONS - SELECT AN APPROVED MIXTURE FROM THOSE LISTED BELOW. AN APPROVED MIXTURE FROM TABLE 4-3 OF THE STANDARDS, OR USE A MIXTURE RECOMMENDED BY RUTGERS COOPERATIVE EXTENSION OR NATURAL RESOURCES CONSERVATION SERVICE WHICH IS APPROVED BY THE SOIL CONSERVATION DISTRICT. SEED GERMINATION SHALL HAVE BEEN TESTED WITHIN 12 MONTHS OF THE PLANTING DATE. NO SEED SHALL BE ACCEPTED WITH A GERMINATION TEST DATE MORE THAN 12 MONTHS OLD UNLESS RETESTED. SEED SHALL BE APPLIED AS NOTED BELOW WITHIN THE DATES SPECIFIED IN THE STANDARDS:

1. LAWN AREAS:

MIX #15 (WELL TO MODERATELY DRAINED SOIL):

HARD FESCUE	130 LBS/ACRE
CHEWING FESCUE	45 LBS/ACRE
STRONG CREEPING RED FESCUE	45 LBS/ACRE
PERENNIAL RYEGRASS	10 LBS/ACRE

OPTIMUM SEEDING DATES:
8/15 - 10/15 (ZONE 6b)

ACCEPTABLE SEEDING DATES:
3/1 - 4/30 ZONE 6b);

SUMMER SEEDING DATES * :
5/1 - 8/14 (ZONE 6b, 7a, 7b)

* NOTE: SUMMER SEEDING SHOULD ONLY BE CONDUCTED WHEN THE SITE IS IRRIGATED. MIXES INCLUDING WHITE CLOVER REQUIRE THAT AT LEAST SIX WEEKS OF GROWING SEASON REMAIN AFTER SEEDING TO ENDURE ESTABLISHMENT BEFORE FREEZING CONDITIONS.

C. CONVENTIONAL SEEDING IS PERFORMED BY APPLYING SEED UNIFORMLY BY HAND, CYCLONE (CENTRIFUGAL) SEEDER, DROP SEEDER, DRILL OR CULTIPACKER SEEDER, EXCEPT FOR DRILLED, HYDROSEEDED OR CULTIPACKED SEEDINGS, SEED SHALL BE INCORPORATED INTO THE SOIL WITHIN 24 HOURS OF SEEDBED PREPARATION TO A DEPTH OF 1/4 TO 1/2 INCH, BY RAKING OR DRAGGING. DEPTH OF SEED PLACEMENT MAY BE 1/4 INCH DEEPER ON COARSE-TEXTURED SOIL.

D. AFTER SEEDING, FIRMING THE SOIL WITH A CORRUGATED ROLLER WILL ASSURE GOOD SEED-TO-SOIL CONTACT, RESTORE CAPILLARITY, AND IMPROVE SEEDLING EMERGENCE. THIS IS THE PREFERRED METHOD. WHEN PERFORMED ON THE CONTOUR, SHEET EROSION WILL BE MINIMIZED AND WATER CONSERVATION ON SITE WILL BE MAXIMIZED.

E. HYDROSEEDING IS A BROADCAST SEEDING METHOD USUALLY INVOLVING A TRUCK, OR TRAILER-MOUNTED TANK, WITH AN AGITATION SYSTEM AND HYDRAULIC PUMP FOR MIXING SEED, WATER AND FERTILIZER AND SPRAYING THE MIX ONTO THE PREPARED SEEDBED. MULCH SHALL NOT BE INCLUDED IN THE TANK WITH SEED. SHORT-FIBERED MULCH MAY BE APPLIED WITH A HYDROSEEDER FOLLOWING SEEDING. (ALSO SEE SECTION 4 - MULCHING BELOW). HYDROSEEDING IS NOT A PREFERRED SEEDING METHOD BECAUSE SEED AND FERTILIZER ARE APPLIED TO THE SURFACE AND NOT INCORPORATED INTO THE SOIL. WHEN POOR SEED TO SOIL CONTACT OCCURS, THERE IS A REDUCED SEED GERMINATION AND GROWTH.

4. MULCHING

MULCHING IS REQUIRED ON ALL SEEDING. MULCH WILL PROTECT AGAINST EROSION BEFORE GRASS IS ESTABLISHED AND WILL PROMOTE FASTER AND EARLIER ESTABLISHMENT. THE EXISTENCE OF VEGETATION SUFFICIENT TO CONTROL SOIL EROSION SHALL BE DEEMED COMPLIANCE WITH THIS MULCHING REQUIREMENT.

A. STRAW OR HAY. UNROTTED SMALL GRAIN STRAW, HAY FREE OF SEEDS, TO BE APPLIED AT THE RATE OF 1-1/2 TO 2 TONS PER ACRE (70 TO 90 POUNDS PER 1,000 SQUARE FEET), EXCEPT THAT WHERE A CRIMPER IS USED INSTEAD OF A LIQUID MULCH-BINDER (TACKIFYING OR ADHESIVE AGENT), THE RATE OF APPLICATION IS 3 TONS PER ACRE. MULCH CHOPPER-BLOWERS MUST NOT GRIND THE MULCH. HAY MULCH IS NOT RECOMMENDED FOR ESTABLISHING FINE TURF OR LAWNS DUE TO THE PRESENCE OF WEED SEED.

APPLICATION - SPREAD MULCH UNIFORMLY BY HAND OR MECHANICALLY SO THAT AT LEAST 85% OF THE SOIL SURFACE IS COVERED. FOR UNIFORM DISTRIBUTION OF HAND-SPREAD MULCH, DIVIDE AREA INTO APPROXIMATELY 1,000 SQUARE FEET SECTIONS AND DISTRIBUTE 70 TO 90 POUNDS WITHIN EACH SECTION.

ANCHORING SHALL BE ACCOMPLISHED IMMEDIATELY AFTER PLACEMENT TO MINIMIZE LOSS BY WIND OR WATER. THIS MAY BE DONE BY ONE OF THE FOLLOWING METHODS, DEPENDING UPON THE SIZE OF THE AREA, STEEPNESS OF SLOPES, AND COSTS.

1. PEG AND TWINE - DRIVE 8 TO 10 INCH WOODEN PEGS TO WITHIN 2 TO 3 INCHES OF THE SOIL SURFACE EVERY 4 FEET IN ALL DIRECTIONS. STAKES MAY BE DRIVEN BEFORE OR AFTER APPLYING THE MULCH. SECURE MULCH TO SOIL SURFACE BY STRETCHING TWINE BETWEEN PEGS IN A CRISS-CROSS AND A SQUARE PATTERN. SECURE TWINE AROUND EACH PEG WITH TWO OR MORE ROUND TURNS.
2. MULCH NETTINGS - STAPLE PAPER, JUTE, COTTON, OR PLASTIC NETTINGS TO THE SOIL SURFACE. USE A DEGRADABLE NETTING IN AREAS TO BE MOWED.
3. CRIMPER (MULCH ANCHORING COULTER TOOL) - A TRACTOR-DRAWN IMPLEMENT, SOMEWHAT LIKE A DISC HARROW, ESPECIALLY DESIGNED TO PUSH OR CUT SOME OF THE BROADCAST LONG FIBER MULCH 3 TO 4 INCHES INTO THE SOIL SO AS TO ANCHOR IT AND LEAVE PART STANDING UPRIGHT. THIS TECHNIQUE IS LIMITED TO AREAS TRAVERSABLE BY A TRACTOR, WHICH MUST OPERATE ON THE CONTOUR OF SLOPES. STRAW MULCH RATE MUST BE 3 TONS PER ACRE. NO TACKIFYING OR ADHESIVE AGENT IS REQUIRED.
4. LIQUID MULCH-BINDERS - MAY BE USED TO ANCHOR SALT HAY, HAY OR STRAW MULCH.
   a. APPLICATIONS SHOULD BE HEAVIER AT EDGES WHERE WIND MAY CATCH THE MULCH, IN VALLEYS, AND AT CRESTS OF BANKS. THE REMAINDER OF THE AREA SHOULD BE UNIFORM IN APPEARANCE.
   b. USE ONE OF THE FOLLOWING:
      1) ORGANIC AND VEGETABLE BASED BINDERS - NATURALLY OCCURRING, POWDER-BASED, HYDROPHILIC MATERIALS WHEN MIXED WITH WATER FORMULATES A GEL AND WHEN APPLIED TO MULCH UNDER SATISFACTORY CURING CONDITIONS WILL FORM MEMBRANED NETWORKS OF INSOLUBLE POLYMERS. THE VEGETABLE GELS SHALL BE PHYSIOLOGICALLY HARMLESS AND NOT RESULT IN A PHYTOTOXIC EFFECT OR IMPEDE GROWTH OF TURF GRASS. USE AT RATES AND WEATHER CONDITIONS AS RECOMMENDED BY THE MANUFACTURER TO ANCHOR MULCH MATERIALS. MANY NEW PRODUCTS ARE AVAILABLE, SOME OF WHICH MAY NEED FURTHER EVALUATION FOR USE IN THIS STATE.
      2) SYNTHETIC BINDERS - HIGH POLYMER SYNTHETIC EMULSION, MISCIBLE WITH WATER WHEN DILUTED AND, FOLLOWING APPLICATION OF MULCH, DRYING AND CURING, SHALL NO LONGER BE SOLUBLE OR DISPERSIBLE IN WATER. BINDER SHALL BE APPLIED AT RATES RECOMMENDED BY THE MANUFACTURER AND REMAIN TACKY UNTIL GERMINATION OF GRASS.

      NOTE: ALL NAMES GIVEN ABOVE ARE REGISTERED TRADE NAMES. THIS DOES NOT CONSTITUTE A RECOMMENDATION OF THESE PRODUCTS TO THE EXCLUSION OF OTHER PRODUCTS.

B. WOOD-FIBER OR PAPER-FIBER MULCH - SHALL BE MADE FROM WOOD, PLANT FIBERS OR PAPER CONTAINING NO GROWTH OR GERMINATION INHIBITING MATERIALS, USED AT THE RATE OF 1,500 POUNDS PER ACRE (OR AS RECOMMENDED BY THE PRODUCT MANUFACTURER) AND MAY BE APPLIED BY A HYDROSEEDER. MULCH SHALL NOT BE MIXED IN THE TANK WITH SEED. USE IS LIMITED TO FLATTER SLOPES AND DURING OPTIMUM SEEDING PERIODS IN SPRING AND FALL.

C. PELLETIZED MULCH - COMPRESSED AND EXTRUDED PAPER AND/OR WOOD FIBER PRODUCT, WHICH MAY CONTAIN CO-POLYMERS, TACKIFIERS, FERTILIZERS, AND COLORING AGENTS. THE DRY PELLETS, WHEN APPLIED TO A SEEDED AREA AND WATERED, FORM A MULCH MAT. PELLETIZED MULCH SHALL BE APPLIED IN ACCORDANCE WITH THE MANUFACTURER'S RECOMMENDATIONS. MULCH MAY BE APPLIED BY HAND OR MECHANICAL SPREADER AT THE RATE OF 60-75 LBS/1,000 SQUARE FEET AND ACTIVATED WITH 0.2 TO 0.4 INCHES OF WATER. THIS MATERIAL HAS BEEN FOUND TO BE BENEFICIAL FOR USE ON SMALL LAWN OR RENOVATION AREAS, SEEDED AREAS WHERE WEED- SEED FREE MULCH IS DESIRED, OR ON SITES WHERE STRAW MULCH AND TACKIFIER AGENT ARE NOT PRACTICAL OR DESIRABLE. APPLYING THE FULL 0.2 TO 0.4 INCHES OF WATER AFTER SPREADING PELLETIZED MULCH ON THE SEED BED IS EXTREMELY IMPORTANT FOR SUFFICIENT ACTIVATION AND EXPANSION OF THE MULCH TO PROVIDE SOIL COVERAGE.

5. IRRIGATION (WHERE FEASIBLE):
IF SOIL MOISTURE IS DEFICIENT SUPPLY NEW SEEDING WITH ADEQUATE WATER (A MINIMUM OF 1/4 INCH APPLIED UP TO TWICE A DAY UNTIL VEGETATION IS WELL ESTABLISHED). THIS IS ESPECIALLY TRUE WHEN SEEDINGS ARE MADE IN ABNORMALLY DRY OR HOT WEATHER OR ON DROUGHTY SITES.

6. TOPDRESSING:
NO FOLLOW-UP TOPDRESSING IS MANDATORY UNLESS WHERE GROSS NITROGEN DIFICIENCY EXISTS IN THE SOIL TO THE EXTENT THAT TURF FAILURE MAY DEVELOP. IN THAT INSTANCE, TOPDRESS WITH 10-10-10 OR EQUIVALENT AT 300 LB PER ACRE OR 7 LB PER 1,000 SF EVERY 3 TO 5 WEEKS UNTIL THE GROSS NITROGEN DEFICIENCY IN THE TURF IS AMELIORATED.

7. ESTABLISHING PERMANENT VEGETATIVE STABILIZATION:
THE QUALITY OF PERMANENT VEGETATION RESTS WITH THE CONTRACTOR. THE TIMING OF SEEDING, PREPARING THE SEEDBED, APPLYING NUTRIENTS, MULCH AND OTHER MANAGEMENT ARE ESSENTIAL. THE SEED APPLICATION RATES IN TABLE 4-2 ARE REQUIRED WHEN A REPORT OF COMPLIANCE IS REQUESTED PRIOR TO ACTUAL ESTABLISHMENT OF PERMANENT VEGETATION. UP TO 50% REDUCTION IN APPLICATION RATES MAY BE USED WHEN PERMANENT VEGETATION IS ESTABLISHED PRIOR TO REQUESTING A REPORT OF COMPLIANCE FROM THE DISTRICT. THESE RATES APPLY TO ALL METHODS OF SEEDING. ESTABLISHING PERMANENT VEGETATION MEANS **80%** VEGETATIVE COVER (OF THE SEEDED SPECIES) AND MOWED ONCE. NOTE THIS DESIGNATION OF MOWED ONCE DOES NOT GUARANTEE THE PERMANENCY OF THE TURF SHOULD OTHER MAINTENANCE FACTORS BE NEGLECTED OR OTHERWISE MISMANAGED.

STABILIZATION WITH MULCH ONLY

MCNJ-SOIL-NOTE-1301 05/01/17

I. SITE PREPARATION

A. GRADE AS NEEDED AND FEASIBLE TO PERMIT THE USE OF CONVENTIONAL EQUIPMENT FOR SEEDBED PREPARATION, SEEDING, MULCH APPLICATION, AND MULCH ANCHORING. ALL GRADING SHOULD BE DONE IN ACCORDANCE WITH STANDARDS FOR LAND GRADING.

B. INSTALL NEEDED EROSION CONTROL PRACTICES OR FACILITIES SUCH AS DIVERSIONS, GRADE STABILIZATION STRUCTURES, CHANNEL STABILIZATION MEASURES, SEDIMENT BASINS, AND WATERWAYS. SEE STANDARDS 11 THROUGH 42.

2. PROTECTIVE MATERIALS

A. UNROTTEN SMALL-GRAIN STRAW, AT 2.0 TO 2.5 TONS PER ACRE, IS SPREAD UNIFORMLY AT 90 TO 115 POUNDS PER 1,000 SQUARE FEET AND ANCHORED WITH A MULCH ANCHORING TOOL, LIQUID MULCH BINDERS, OR NETTING TIE DOWN. OTHER SUITABLE MATERIALS MAY BE USED IF APPROVED BY THE SOIL CONSERVATION DISTRICT. THE APPROVED RATES ABOVE HAVE BEEN MET WHEN THE MULCH COVERS THE GROUND COMPLETELY UPON VISUAL INSPECTION, I.E. THE SOIL CANNOT BE SEEN BELOW THE MULCH.

B. SYNTHETIC OR ORGANIC SOIL STABILIZERS MAY BE USED UNDER SUITABLE CONDITIONS AND IN QUANTITIES AS RECOMMENDED BY THE MANUFACTURER.

C. WOOD-FIBER OR PAPER-FIBER MULCH HYDROSEEDER IN QUANTITIES/APPLICATION RATES AS RECOMMENDED BY MANUFACTURER.

D. MULCH NETTING, SUCH AS PAPER JUTE, EXCELSIOR, COTTON, OR PLASTIC, MAY BE USED.

E. WOODCHIPS APPLIED UNIFORMLY TO A MINIMUM DEPTH OF 2 INCHES MAY BE USED. WOODCHIPS WILL NOT BE USED ON AREAS WHERE FLOWING WATER COULD WASH THEM INTO AN INLET AND PLUG IT.

3. MULCH ANCHORING - SHOULD BE ACCOMPLISHED IMMEDIATELY AFTER PLACEMENT OF HAY OR STRAW MULCH TO MINIMIZE LOSS BY WIND OR WATER. THIS MAY BE DONE BY ONE OF THE FOLLOWING METHODS, DEPENDING UPON THE SIZE OF THE AREA AND STEEPNESS OF THE SLOPES.

A. PEG AND TWINE - DRIVE 8 TO 10 INCH WOODEN PEGS TO WITHIN 2 TO 3 INCHES OF THE SOIL SURFACE EVERY 4 FEET IN ALL DIRECTIONS. STAKES MAY BE DRIVEN BEFORE OR AFTER APPLYING MULCH. SECURE MULCH TO SOIL SURFACE BY STRETCHING TWINE BETWEEN PEGS IN A CRISS-CROSS AND A SQUARE PATTERN. SECURE TWINE AROUND EACH PEG WITH TWO OR MORE ROUND TURNS.

B. MULCH NETTING - STAPLE PAPER, COTTON, OR PLASTIC NETTINGS OVER MULCH. USE DEGRADABLE NETTING IN AREAS TO BE MOWED. NETTING IS USUALLY AVAILABLE IN ROLLS 4 FEET WIDE AND UP TO 300 FEET LONG.

C. CRIMPER MULCH ANCHORING COULTER TOOL - A TRACTOR-DRAWN IMPLEMENT ESPECIALLY DESIGNED TO PUNCH AND ANCHOR MULCH INTO THE SOIL SURFACE THIS PRACTICE AFFORDS MAXIMUM EROSION CONTROL BUT ITS USE IS LIMITED TO THE SLOPES UPON WHICH THE TRACTOR CAN OPERATE SAFELY. SOIL PENETRATION SHOULD BE ABOUT 3 TO 4 INCHES. ON A SLOPING LAND, THE OPERATION SHOULD BE ON THE CONTOUR.

D. LIQUID MULCH-BINDERS

1. APPLICATIONS SHOULD BE HEAVIER AT EDGES WHERE WIND CATCHES THE MULCH, IN VALLEYS, AND AT CRESTS OF BANKS. REMAINDER OF AREA SHOULD BE UNIFORM IN APPEARANCE.
2. USE ONE OF THE FOLLOWING:
   a. ORGANIC AND VEGETABLE BASED BINDERS - NATURALLY OCCURRING, POWDER BASED, HYDROPHILIC MATERIALS THAT MIXED WITH WATER FORMULATES A GEL AND WHEN APPLIED TO MULCH UNDER SATISFACTORY CURING CONDITIONS WILL FORM MEMBRANE NETWORKS OF INSOLUBLE POLYMERS. THE VEGETABLE GEL SHALL BE PHYSIOLOGICALLY HARMLESS AND NOT RESULT IN A PHYTO-TOXIC EFFECT OR IMPEDE GROWTH OF TURFGRASS. VEGETABLE BASED GELS SHALL BE APPLIED AT RATES AND WEATHER CONDITIONS RECOMMENDED BY THE MANUFACTURER.
   b. SYNTHETIC BINDERS - HIGH POLYMERS SYNTHETIC EMULSION, MISCIBLE WITH WATER WHEN DILUTED AND FOLLOWING APPLICATION TO MULCH, DRYING AND CURING SHALL NO LONGER BE SOLUBLE OR DISPERSIBLE IN WATER. IT SHALL BE APPLIED AT RATES AND WEATHER CONDITIONS RECOMMENDED BY THE MANUFACTURER AND REMAIN TACKY UNTIL GERMINATION OF GRASS.

DUST CONTROL

MCNJ-SOIL-NOTE-1400 05/01/17

DUST CONTROL METHODS:

1. APPLY MULCHES OR VEGETATIVE COVER AS PER NJ SOIL EROSION AND SEDIMENT CONTROL STANDARDS.
2. TILL AND ROUGHEN SURFACE AND BRING CLODS TO THE SURFACE. THIS IS A TEMPORARY EMERGENCY MEASURE WHICH SHOULD BE USED BEFORE SOIL BLOWING STARTS. BEGIN PLOWING ON WINDWARD SIDE OF SITE. CHISEL-TYPE PLOWS SPACED ABOUT 12 INCHES APART AND SPRING-TOOTHED HARROWS ARE EXAMPLES OF EQUIPMENT WHICH MAY PRODUCE THE DESIRED EFFECT.
3. SPRINKLE THE SITE UNTIL THE SURFACE IS WET.
4. ERECT BARRIERS SUCH AS SOLID BOARD FENCES, SNOW FENCES, BURLAP FENCES, CRATE WALLS, BALES OF HAY AND SIMILAR MATERIAL TO CONTROL AIR CURRENTS AND SOIL BLOWING.
5. APPLY CALCIUM CHLORIDE IN THE FORM OF LOOSE, DRY GRANULES OR FLAKES FINE ENOUGH TO FEED THROUGH COMMONLY USED SPREADERS AT A RATE THAT WILL KEEP SURFACE MOIST BUT NOT CAUSE POLLUTION OR PLANT DAMAGE. NOT SUITABLE ON STEEPER SLOPES NEAR THE STREAMS OR POTENTIALLY ACCUMULATE AROUND PLANTS.
6. COVER SURFACE WITH CRUSHED STONE OR COARSE GRAVEL.
7. USE SPRAY-ON ADHESIVE ON MINERAL SOILS (NOT EFFECTIVE ON MUCK SOILS). KEEP TRAFFIC OFF THESE AREAS. MATERIALS AS FOLLOWS:

MATERIAL	WATER DILUTION	TYPE OF NOZZLE	APPLY GALLONS/ACRE
ANIONIC ASPHALT EMULSION	7:1	COARSE SPRAY	1200
LATEX EMULSION	12.5:1	FINE SPRAY	235
RESIN IN WATER	4:1	FINE SPRAY	300
POLYACRYLAMIDE (PAM) - SPRAY ON POLYACRYLAMIDE (PAM) - DRY SPREAD	APPLY ACCORDING TO MANU

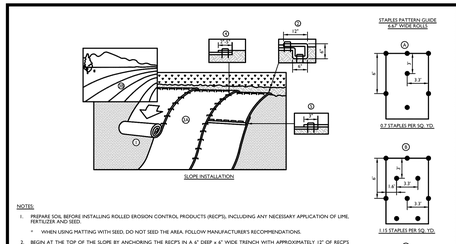

NOTES:

1. PREPARE SOIL BEFORE INSTALLING ROLLED EROSION CONTROL PRODUCTS (RECPS), INCLUDING ANY NECESSARY APPLICATION OF LIME, FERTILIZER AND SEED.
   - * WHEN USING MATTING WITH SEED, DO NOT SEED THE AREA. FOLLOW MANUFACTURER'S RECOMMENDATIONS.
2. BEGIN AT THE TOP OF THE SLOPE BY ANCHORING THE RECP'S IN A 6" DEEP x 6" WIDE TRENCH WITH APPROXIMATELY 12" OF RECPS EXTENDED BEYOND THE UP-SLOPE PORTION OF THE TRENCH. ANCHOR THE RECP'S WITH A ROW OF STAPLES/STAKES APPROXIMATELY 12" APART IN THE BOTTOM OF THE TRENCH. BACKFILL AND COMPACT THE TRENCH AFTER STAPLING. APPLY SEED TO COMPACTED SOIL AND FOLD REMAINING 12" PORTION OF RECP'S BACK OVER SEED AND COMPACTED SOIL. SECURE RECP'S OVER COMPACTED SOIL WITH A ROW OF STAPLES/STAKES SPACED APPROXIMATELY 12" APART ACROSS THE WIDTH OF THE RECPS.
3. ROLL THE RECP'S (A) DOWN OR (B) HORIZONTALLY STEP BY STEP ACROSS THE SLOPE TAMPERING IT DOWN ALONG THE WAY. RECP'S SHALL UNROLL WITH APPROPRIATE SIDE TIGHTLY AGAINST THE SOIL SURFACE. RECPS MUST BE SECURELY FASTENED TO SOIL SURFACE BY PLACING STAPLES/STAKES IN APPROXIMATELY TWO-THIRDS OF THE NUMBER OF STAPLES/STAKES REQUIRED. ALL STAPLES/STAKES SHOULD BE PLACED THROUGH EACH OF THE COLORED DOTS CORRESPONDING TO THE APPROPRIATE STAPLE PATTERN.
4. THE EDGES OF PARALLEL RECP'S MUST BE STAKED WITH APPROXIMATELY 2" TO 3" OVERLAP DEPENDING ON RECP'S TYPE.
5. CONSECUTIVE RECP'S SPLICED DOWN THE SLOPE MUST BE PLACED END-OVER END (SHINGLE STYLE) WITH APPROXIMATELY 3" OVERLAP. STAPLE THROUGH OVERLAPPED AREA, APPROXIMATELY 12" APART ACROSS ENTIRE RECP'S WIDTH.
   - * IN LOOSE SOIL CONDITIONS, THE USE OF STAPLE OR STAKE LENGTHS GREATER THAN 6" MAY BE NECESSARY TO PROPERLY SECURE THE RECP'S.

EROSION MATTING (CURLEX ENFORCER I) DETAIL

NOT TO SCALE MCN-SOIL-EROS-2200 05/01/17

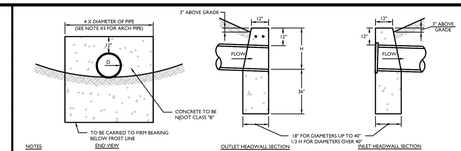

NOTES:

1. EXPOSED PORTIONS OF WALL TO BE RUBBED AND FLOATED.
2. ALL EDGES TO BE CHAMFERED 1 INCH.
3. FOR ARCH PIPE, USE WIDTH OF HEADWALL AS 3H + SPAN.
4. FOR MORE THAN ONE PIPE, CONTRACTOR TO SET THE PIPES AT A MINIMUM ONE FOOT APART (OUTSIDE TO OUTSIDE OF PIPES).
5. THE END OF THE HEADWALL SHALL BE SET 2 X DIAMETER OFF THE CENTERLINE OF THE CONTROLLING PIPE.
6. CONTRACTOR TO PROVIDE SITE SPECIFIC SHOP DRAWINGS FOR EACH HEADWALL PREPARED BY A STATE LICENSED PROFESSIONAL ENGINEER FOR REVIEW AND APPROVAL PRIOR TO CONSTRUCTION.

CONCRETE HEADWALL (STRAIGHT) DETAIL

NOT TO SCALE EFFECTIVENAME 05/01/18

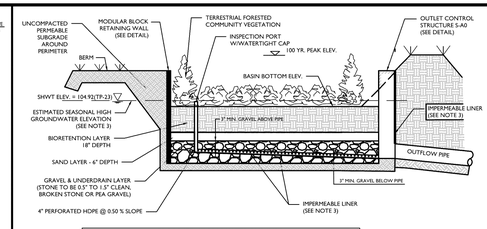

NOTES:

1. THE BIORETENTION SYSTEM CONSISTING OF A SOIL BED PLANTED WITH TERRESTRIAL FORESTED COMMUNITY VEGETATION PER LANDSCAPE PLAN SHALL BE CONSTRUCTED AND INSTALLED AS PER N.J.D.E.P. STORMWATER BEST MANAGEMENT PRACTICES MANUAL DESIGN CRITERIA.
2. THE PLANTING SOIL BED MATERIAL SHALL CONSIST OF THE FOLLOWING MIX, BY VOLUME: 85-95% SAND, WITH NO MORE THAN 25% OF THE SAND AS FINE OR VERY FINE SAND; NO MORE THAN 15% SILT AND CLAY WITH 3-5% CLAY CONTENT. THE ENTIRE MIX SHALL BE AMENDED WITH 3-7% ORGANICS, BY WEIGHT, AND CERTIFIED BY THE VENDOR. THE MATERIAL'S PH SHOULD RANGE FROM 5.5 TO 6.5. THE MATERIAL SHALL BE PLACED IN 6" LIFTS. THE TOTAL DEPTH OF PLANTING SOIL BED SHALL BE A MINIMUM OF 1.5 FEET.
3. AN IMPERMEABLE LINER SHALL BE PROVIDED AROUND THE ENTIRE BASIN AND BELOW THE UNDERDRAIN, TO PREVENT ANY GROUNDWATER FROM ENTERING THE SYSTEM AND PREVENT DEAD STORAGE UNDERNEATH THE UNDERDRAIN FROM OCCURRING.
4. THE VEGETATION IN THE BIORETENTION SYSTEM SHALL BE OF TERRESTRIAL FORESTED COMMUNITY VEGETATION.
5. DURING CLEARING AND GRADING OF THE SITE, MEASURES MUST BE TAKEN TO ELIMINATE SOIL COMPACTION AT THE LOCATION OF THE PROPOSED BIORETENTION SYSTEM. THE LOCATION OF THE PROPOSED BIORETENTION SYSTEM MUST BE CORDONED OFF DURING CONSTRUCTION TO PREVENT COMPACTION OF THE SUBSOIL BY CONSTRUCTION EQUIPMENT OR STOCKPILES.
6. THE LOCATION OF THE PROPOSED BIORETENTION SYSTEM SHOULD NOT BE USED TO PROVIDE SEDIMENT CONTROL DURING CONSTRUCTION; HOWEVER, WHEN UNAVOIDABLE, THE BOTTOM OF THE SEDIMENT CONTROL BASIN SHOULD BE AT LEAST 2 FEET ABOVE THE FINAL GRADE ELEVATION OF THE BOTTOM OF THE SOIL BED IN THE BIORETENTION BASIN.
7. THE CONTRIBUTING DRAINAGE AREA MUST BE COMPLETELY STABILIZED PRIOR TO BIORETENTION SYSTEM USE.
8. POST-CONSTRUCTION TESTING MUST BE PERFORMED ON THE AS-BUILT BIORETENTION SYSTEM IN ACCORDANCE WITH THE CONSTRUCTION AND POST-CONSTRUCTION OVERSIGHT AND SOIL PERMEABILITY TESTING SECTION IN CHAPTER 13; SOIL TESTING CRITERIA OF THE N.J.D.E.P. BMP MANUAL. TO ENSURE THAT THE AS-BUILT SYSTEM FUNCTIONS AS DESIGNED, POST-CONSTRUCTION TESTING MUST INCLUDE A DETERMINATION OF THE PERMEABILITY RATES OF THE SOIL BED AND THE HYDRAULIC CAPACITY OF THE UNDERDRAIN, IN UNDERGRADED SYSTEMS, OR THE PERMEABILITY OF THE SUBSOIL, IN INFILTRATION SYSTEMS.

PROPOSED STORMWATER BMP INFO

BMP ID	BMP TYP	BOTTOM OF STONE EL (STONE W/ PIPES FOR UNDERDRAINED BMPS)	BOTTOM OF BIO MEDIA LAYER EL	BMP SURFACE BOTTOM EL	WQ STORM EL	100-YR STORM EL
A	BIO (18" MEDIA) W/ UNDERDRAIN	101.45	102.95	104.45	104.97	107.76

BIORETENTION BASIN A CROSS-SECTION DETAIL

NOT TO SCALE GNRL-DTLS-STND-GRID 08/06/21

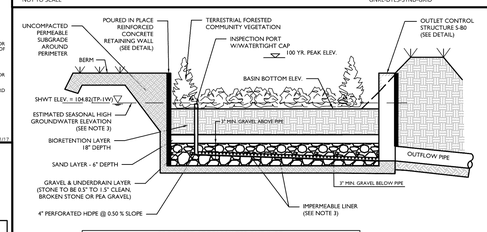

NOTES:

1. THE BIORETENTION SYSTEM CONSISTING OF A SOIL BED PLANTED WITH TERRESTRIAL FORESTED COMMUNITY VEGETATION PER LANDSCAPE PLAN SHALL BE CONSTRUCTED AND INSTALLED AS PER N.J.D.E.P. STORMWATER BEST MANAGEMENT PRACTICES MANUAL DESIGN CRITERIA.
2. THE PLANTING SOIL BED MATERIAL SHALL CONSIST OF THE FOLLOWING MIX, BY VOLUME: 85-95% SAND, WITH NO MORE THAN 25% OF THE SAND AS FINE OR VERY FINE SAND; NO MORE THAN 15% SILT AND CLAY WITH 3-5% CLAY CONTENT. THE ENTIRE MIX SHALL BE AMENDED WITH 3-7% ORGANICS, BY WEIGHT, AND CERTIFIED BY THE VENDOR. THE MATERIAL'S PH SHOULD RANGE FROM 5.5 TO 6.5. THE MATERIAL SHALL BE PLACED IN 6" LIFTS. THE TOTAL DEPTH OF PLANTING SOIL BED SHALL BE A MINIMUM OF 1.5 FEET.
3. AN IMPERMEABLE LINER SHALL BE PROVIDED AROUND THE ENTIRE BASIN AND BELOW THE UNDERDRAIN, TO PREVENT ANY GROUNDWATER FROM ENTERING THE SYSTEM AND PREVENT DEAD STORAGE UNDERNEATH THE UNDERDRAIN FROM OCCURRING.
4. THE VEGETATION IN THE BIORETENTION SYSTEM SHALL BE OF TERRESTRIAL FORESTED COMMUNITY VEGETATION.
5. DURING CLEARING AND GRADING OF THE SITE, MEASURES MUST BE TAKEN TO ELIMINATE SOIL COMPACTION AT THE LOCATION OF THE PROPOSED BIORETENTION SYSTEM. THE LOCATION OF THE PROPOSED BIORETENTION SYSTEM MUST BE CORDONED OFF DURING CONSTRUCTION TO PREVENT COMPACTION OF THE SUBSOIL BY CONSTRUCTION EQUIPMENT OR STOCKPILES.
6. THE LOCATION OF THE PROPOSED BIORETENTION SYSTEM SHOULD NOT BE USED TO PROVIDE SEDIMENT CONTROL DURING CONSTRUCTION; HOWEVER, WHEN UNAVOIDABLE, THE BOTTOM OF THE SEDIMENT CONTROL BASIN SHOULD BE AT LEAST 2 FEET ABOVE THE FINAL GRADE ELEVATION OF THE BOTTOM OF THE SOIL BED IN THE BIORETENTION BASIN.
7. THE CONTRIBUTING DRAINAGE AREA MUST BE COMPLETELY STABILIZED PRIOR TO BIORETENTION SYSTEM USE.
8. POST-CONSTRUCTION TESTING MUST BE PERFORMED ON THE AS-BUILT BIORETENTION SYSTEM IN ACCORDANCE WITH THE CONSTRUCTION AND POST-CONSTRUCTION OVERSIGHT AND SOIL PERMEABILITY TESTING SECTION IN CHAPTER 13; SOIL TESTING CRITERIA OF THE N.J.D.E.P. BMP MANUAL. TO ENSURE THAT THE AS-BUILT SYSTEM FUNCTIONS AS DESIGNED, POST-CONSTRUCTION TESTING MUST INCLUDE A DETERMINATION OF THE PERMEABILITY RATES OF THE SOIL BED AND THE HYDRAULIC CAPACITY OF THE UNDERDRAIN, IN UNDERGRADED SYSTEMS, OR THE PERMEABILITY OF THE SUBSOIL, IN INFILTRATION SYSTEMS.

PROPOSED STORMWATER BMP INFO

BMP ID	BMP TYP	BOTTOM OF STONE EL (STONE W/ PIPES FOR UNDERDRAINED BMPS)	BOTTOM OF BIO MEDIA LAYER EL	BMP SURFACE BOTTOM EL	WQ STORM EL	100-YR STORM EL
A	BIO (18" MEDIA) W/ UNDERDRAIN	101.50	103.00	104.50	105.50	107.46

BIORETENTION BASIN B CROSS-SECTION DETAIL

NOT TO SCALE GNRL-DTLS-STND-GRID 08/06/21

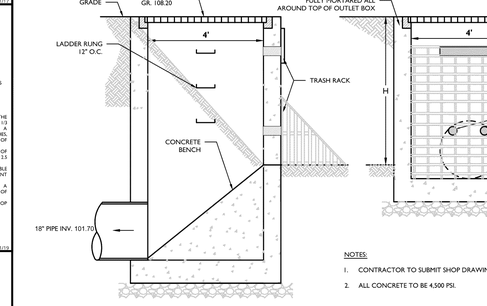

NOTES:

1. CONTRACTOR TO SUBMIT SHOP DRAWING FOR REVIEW AND APPROVAL.
2. ALL CONCRETE TO BE 4,500 PSI.

OUTLET CONTROL STRUCTURE S-Ao DETAIL (SINGLE CHAMBER)

NOT TO SCALE

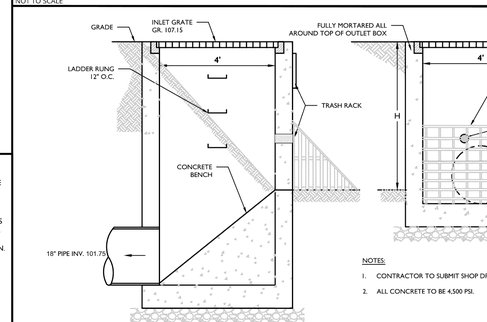

NOTES:

1. CONTRACTOR TO SUBMIT SHOP DRAWING FOR REVIEW AND APPROVAL.
2. ALL CONCRETE TO BE 4,500 PSI.

OUTLET CONTROL STRUCTURE S-Bo DETAIL (SINGLE CHAMBER)

NOT TO SCALE

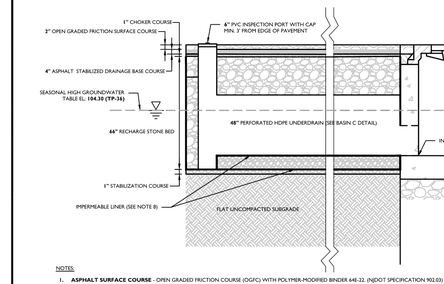

NOTES:

1. **ASPHALT SURFACE COURSE** - OPEN GRADED FRICTION COURSE (OGFC) WITH POLYMER-MODIFIED BINDER 64E-22. (NJDOT SPECIFICATION 902.03)
2. **ASPHALT BASE COURSE** - ASPHALT STABILIZED DRAINAGE COURSE (ASDC) (NJDOT SPECIFICATION 902.06)
3. **CHOKER COURSE** - CLEAN, WASHED BROKEN STONE (AASHTO NO. 57; NJDOT SPECIFICATION 901.3)
4. **STONE STORAGE RESERVOIR BED** - 1.5" TO 3" CLEAN, WASHED, UNIFORMLY GRADED CRUSHED STONE (AASHTO NO. 3; I OR 4; NJDOT SPECIFICATION 901.03)
5. **UNDERDRAIN** - SCHEDULE 40 PERFORATED PVC PIPE WRAP WITH FILTER FABRIC CONNECTING TO THE NEAREST DRAINAGE STRUCTURE.
6. **STABILIZATION COURSE** - 1½" STONE (AASHTO NO. 7; NJDOT SPECIFICATION 901.03). USED WHEN POTENTIAL FOR SUBGRADE TO COMPRESS OR SUBJECT TO LATERAL MOVEMENT DURING CONSTRUCTION.
7. **INSPECTION PORTS** - PVC SCHEDULE 40 PIPE LOCATED AT THE UPSTREAM AND DOWNSTREAM ENDS OF THE UNDERDRAIN SYSTEM, 2' AWAY FROM ANY EDGE. INSPECTION PORT IS TO BE CAPPED WITH A REMOVABLE METAL CAP, SET FLUSH WITH THE PAVEMENT SURFACE.
8. **IMPERMEABLE LINER** - IMPERMEABLE LINER SHALL BE PROVIDED AROUND THE ENTIRE BASIN AND BELOW THE UNDERDRAIN, TO PREVENT ANY GROUNDWATER FROM ENTERING THE SYSTEM AND PREVENT DEAD STORAGE UNDERNEATH THE UNDERDRAIN FROM OCCURRING.
9. SUBGRADE SHOULD BE FLAT AND NOT COMPACTED.
10. POROUS PAVEMENT AREAS MUST BE PROTECTED FROM SEDIMENT-LADEN RUNOFF AND EXCESSIVE COMPACTION FROM CONSTRUCTION TRAFFIC DURING AND AFTER CONSTRUCTION TO PREVENT PAVEMENT CLOGGING.
11. POROUS ASPHALT PAVEMENT MUST BE CONSTRUCTED PER NJDOT SPECIFICATION 402. NO PAVING OF SURFACE COURSE UNDER 50°F AMBIENT TEMPERATURE. USE STATIC ROLLER ONLY, COMPACTED TO 96% OF THE LABORATORY COMPACTED DENSITY.
12. NO VEHICULAR TRAFFIC FOR 48 HOURS AFTER PAVEMENT INSTALLATION.
13. POST CONSTRUCTION TESTING MUST BE PERFORMED PER ASTM C1781. AT LEAST 3 TEST LOCATIONS EVENLY SPACED ACROSS THE POROUS PAVEMENT SYSTEM CHECK FOR PERMEABILITY AFTER CONSTRUCTION (NJDEP BMP = 6.4 IN/HR FOR WATER QUALITY CONTROL OR 20 IN/HR FOR RUNOFF REDUCTION).

POROUS ASPHALT PAVEMENT C (WITH UNDERDRAIN) DETAIL

NOT TO SCALE

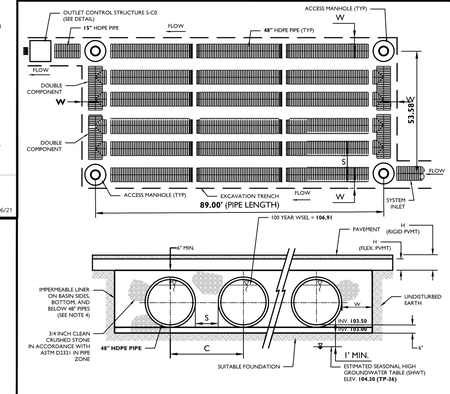

NOTES:

1. SEE ABOVE CHART SPECIFIC TO MATERIAL/PIPE SIZES PER MANUFACTURER'S SPECIFICATIONS.
2. (H) FOR FLEXIBLE PAVEMENT MAY INCLUDE THE PAVEMENT SUBBASE THICKNESS AS MINIMUM COVER.
3. CLASS IA BACKFILL MATERIAL PER ASTM 2321 REQUIRED FOR PIPES 60" DIAMETER OR LARGER.

UNDERGROUND HDPE SYSTEM NOTES:

1. ALL REFERENCES TO CLASS I OR II MATERIAL ARE PER ASTM D2321 "STANDARD PRACTICE FOR UNDERGROUND INSTALLATION OF THERMOPLASTIC PIPE FOR SEWERS AND OTHER GRAVITY FLOW APPLICATIONS", LATEST EDITION.
2. ALL RETENTION AND DETENTION SYSTEMS SHALL BE INSTALLED IN ACCORDANCE WITH ASTM D2321, LATEST EDITION AND THE MANUFACTURER'S PUBLISHED INSTALLATION GUIDELINES.
3. MEASURES SHOULD BE TAKEN TO PREVENT THE MIGRATION OF NATIVE FINES INTO THE BACKFILL MATERIAL, WHEN REQUIRED. SEE ASTM D2321.
4. IMPERMEABLE LINER - IMPERMEABLE LINER SHALL BE PROVIDED AROUND THE ENTIRE BASIN AND BELOW THE UNDERDRAIN, TO PREVENT ANY GROUNDWATER FROM ENTERING THE SYSTEM AND PREVENT DEAD STORAGE UNDERNEATH THE UNDERDRAIN FROM OCCURRING.
5. FOUNDATION: WHERE THE TRENCH BOTTOM IS UNSUITABLE, THE CONTRACTOR SHALL EXCAVATE TO A DEPTH REQUIRED BY THE ENGINEER AND REPLACE WITH SUITABLE MATERIAL AS SPECIFIED BY THE ENGINEER. AS AN ALTERNATIVE AND AT THE DISCRETION OF THE DESIGN ENGINEER, THE TRENCH BOTTOM MAY BE STABILIZED USING A GEOTEXTILE MATERIAL.
6. BEDDING: SUITABLE MATERIAL SHALL BE CLASS IOR II. THE CONTRACTOR SHALL PROVIDE DOCUMENTATION FOR MATERIAL SPECIFICATION TO ENGINEER, UNLESS OTHERWISE NOTED BY THE ENGINEER. BEDDING THICKNESS SHALL BE 4" FOR 4"-24" PIPES, 6" FOR 30"-60"PIPES.
7. INITIAL BACKFILL: SUITABLE MATERIAL SHALL BE CLASS I OR II INTHE PIPE ZONE EXTENDING NOT LESS THAN 6" ABOVE CROWN OF PIPE. THE CONTRACTOR SHALL PROVIDE DOCUMENTATION FOR MATERIAL SPECIFICATION TO ENGINEER. MATERIAL SHALL BE INSTALLED AS REQUIRED IN ASTM D2321. LATEST EDITION.
8. MINIMUM COVER: MINIMUM COVER OVER ALL RETINETION/DETENTION SYSTEMS IN NON-TRAFFIC APPLICATIONS (GRASS OR LANDSCAPE AREAS) IS 12" FROM TOP OF PIPE TO GROUND SURFACE. ADDITIONAL COVER MAY BE REQUIRED TO PREVENT FLOATATION. FOR TRAFFIC APPLICATIONS, MINIMUM COVER IS 12" UP TO 36" DIAMETER PIPE AND 24" OF COVER FOR 42"- 60" DIAMETER PIPE, MEASURED FROM TOP OF PIPE TO BOTTOM OF FLEXIBLE PAVEMENT OR TO TOP OF RIGID PAVEMENT.

NOMINAL DIAMETER	NOMINAL O.D.	TYPICAL SPACING "S"	TYPICAL SPACING "C"	TYPICAL SIDE WALL "W"	H (MIN. PIPE COVER) (TRAFFIC)
15" (375 MM)	18" (457 MM)	12" (292 MM)	28.5" (724 MM)	8" (203 MM)	12" (292 MM)
18" (450 MM)	21" (533 MM)	12" (330 MM)	33.9" (862 MM)	9" (229 MM)	12" (292 MM)
24" (600 MM)	28" (711 MM)	13" (330 MM)	40.2" (1024 MM)	10" (254 MM)	12" (292 MM)
30" (750 MM)	36" (914 MM)	18" (457 MM)	53.1" (1347 MM)	18" (457 MM)	12" (292 MM)
36" (900 MM)	42" (1067 MM)	22" (559 MM)	63" (1600 MM)	18" (457 MM)	12" (292 MM)
42" (1050 MM)	48" (1219 MM)	24" (610 MM)	71.9" (1826 MM)	18" (457 MM)	24" (610 MM)
48" (1200 MM)	54" (1372 MM)	25" (635 MM)	78.5" (1994 MM)	18" (457 MM)	24" (610 MM)
60" (1500 MM)	67" (1702 MM)	24" (610 MM)	90" (2286 MM)	18" (457 MM)	24" (610 MM)

PROPOSED BASIN C UNDERGROUND DETENTION BASIN (CLOSED SYSTEM) BELOW POROUS PAVEMENT DETAIL

NOT TO SCALE

NOTES:

1. CONCRETE WASHOUTS ARE REQUIRED ON ALL CONSTRUCTION SITES INVOLVING CONCRETE AND STUCCO USE:
2. THE CONTRACTOR SHALL REQUIRE ALL CONCRETE DRIVERS TO UTILIZE THE CONCRETE WASHOUTS ONSITE.
3. WASHOUT FACILITIES SHALL BE LOCATED AT LEAST 50 FEET AWAY FROM STORM SEWER DRAIN INLETS, GUTTERS, OPEN DITCHES, AND WATER COURSES.
4. APPROPRIATE STONE SHOULD COVER PATHS TO CONCRETE WASHOUT.
5. THE NUMBER OF CONCRETE WASHOUTS DEPENDS ON THE EXPECTED DEMAND FOR STORAGE CAPACITY. LARGE SITES WITH EXTENSIVE CONCRETE WORK SHALL BE PLACED AT MULTIPLE LOCATIONS FOR USE BY CONCRETE TRUCK DRIVERS.
6. CONCRETE WASHOUT AREAS SHALL BE IDENTIFIED BY POSTING SIGNS ONSITE.
7. CONCRETE WASHOUTS ARE TO BE INSPECTED DAILY BY THE CONTRACTOR FOR LEAKS OR TEARS IN PLASTIC LINER.
8. REMOVE AND DISPOSE OF ALL MATERIAL WHEN THE WASHOUT HAS BEEN FILLED TO 75% CAPACITY.
9. PRIOR TO ANY RAINFALL, ALL CONCRETE WASHOUTS ARE TO BE CLEANED OUT OR COVERED.
10. ONCE THE MATERIAL HAS BEEN CLEANED OUT OF THE CONCRETE WASHOUT FACILITY, THE FACILITY MUST BE INSPECTED FOR REPAIR, RECONSTRUCTION OR REPLACEMENT. ALL PLASTIC LINING SHALL BE REMOVED AND REPLACED.
11. PRE-FABRICATED OR ONSITE FABRICATED CONCRETE WASHOUTS MAY BE USED.
12. OPTIONS FOR ONSITE CONCRETE WASHOUTS:
    - A. DIG A PIT AND LINE WITH 10 MIL PLASTIC SHEETING.
    - B. CREATE AN ABOVE-GROUND STRUCTURE FROM STRAW BALES OR SANDBAGS, WITH 10 MIL PLASTIC LINING.

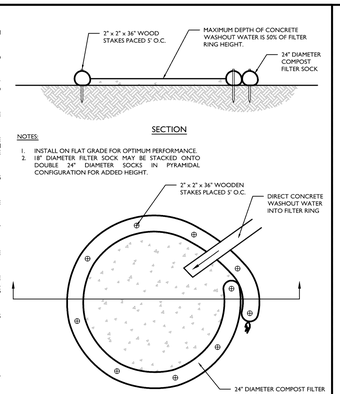

CONCRETE WASHOUT DETAIL

NOT TO SCALE MOD: 07/01/25 12/01/20

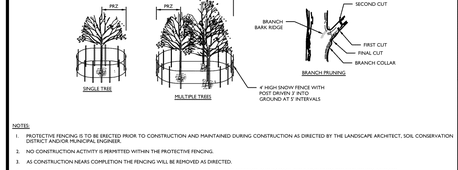

NOTES:

1. PROTECTIVE FENCING IS TO BE ERECTED PRIOR TO CONSTRUCTION AND MAINTAINED DURING CONSTRUCTION AS DIRECTED BY THE LANDSCAPE ARCHITECT, SOIL CONSERVATION DISTRICT AND/OR MUNICIPAL ENGINEER.
2. NO CONSTRUCTION ACTIVITY IS PERMITTED WITHIN THE PROTECTIVE FENCING.
3. AS CONSTRUCTION NEARS COMPLETION THE FENCING WILL BE REMOVED AS DIRECTED.
4. AT THE COMPLETION OF CONSTRUCTION, ALL TREES WILL BE PRUNED AS NECESSARY TO CORRECT ANY DAMAGE RESULTING FROM CONSTRUCTION ACTIVITY.
5. GENERAL MECHANICAL DAMAGE - SEE CRITICAL ROOT ZONE CALCULATION (CRZ) FOR CORRECT PLACEMENT OF TREE PROTECTION.
6. BOX TREES WITHIN 25 FEET OF A BUILDING SITE TO PREVENT MECHANICAL INJURY. FENCING OR OTHER BARRIER SHOULD BE INSTALLED BEYOND THE CRITICAL ROOT ZONE.
7. BOARDS WILL NOT BE NAILED TO TREES DURING BUILDING OPERATIONS.
8. FEEDER ROOTS SHOULD NOT BE CUT IN AN AREA INSIDE THE PROTECTED ROOT ZONE (PRZ) OR CRITICAL ROOT ZONE (CRZ). TREE ROOT SYSTEM COMMONLY EXTEND BEYOND THE DRIP LINE.
9. DAMAGED TRUNKS OR EXPOSED ROOTS SHOULD HAVE DAMAGED BARK REMOVED IMMEDIATELY AND NO PAINT SHALL BE APPLIED. EXPOSED ROOTS SHOULD BE COVERED WITH TOPSOIL IMMEDIATELY AFTER EXCAVATION IS COMPLETE SHALL BE PRUNED TO GIVE A CLEAN, SMOOTH SURFACE AMENABLE TO HEALING. ROOTS EXPOSED DURING HOT WEATHER SHOULD BE IRRIGATED TO PREVENT PERMANENT TREE INJURY. CARE FOR SERIOUS INJURY SHOULD BE PRESCRIBED BY A PROFESSIONAL FORESTER OR CERTIFIED TREE EXPERT.
10. TREE LIMB REMOVAL WHERE NECESSARY, WILL BE DONE AS NATURAL TARGET PRUNING TO REMOVE THE DESIRED BRANCH COLLAR. THERE SHOULD BE NO FLUSH CUTS. FLUSH CUTS DISTROY A MAJOR DEFENSE SYSTEM OF THE TREE. NO TREE PAINT SHALL BE APPLIED. ALL CUTS SHALL BE MADE AT THE OUTSIDE EDGE OF THE BRANCH COLLAR. CUTS MADE TOO FAR BEYOND THE BRANCH COLLAR MAY LEAD TO EXCESS SPROUTING, CRACKS AND ROT. STPK CALL OF A "V" CROTCH SHOULD BE CONSIDERED FOR FREE STANDING SPECIMEN TREES TO AVOID FUTURE SPLITTING DAMAGE.
11. CRITICAL ROOT ZONE (CRZ) OR PROTECTED ROOT ZONE (PRZ) CALCULATION:
    MEASURE DHB OF THE TREE (DIAMETER OF TREE IN BREAST HEIGHT OR 4.5' ABOVE GROUND ON THE UPHILL SIDE) IN INCHES.
    CRZ OR PRZ = DHB TIMES 1.5 (FOR OLD/UNHEALTHY/SENSITIVE TREES) OR DHB X 1.0 (FOR HEALTHY/TOLERANT TREES), EXPRESS IN FEET.

TEMPORARY TREE PROTECTION DETAIL

NOT TO SCALE MCN-SOIL-EROS-2100 05/01/17

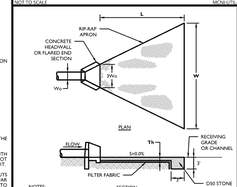

NOTES:

1. SEE PLAN FOR APRON DIMENSIONS.
2. SIDE SLOPE SHALL BE 2:1 OR FLATTER. THE BOTTOM GRADE SHALL BE LEVEL (0% SLOPE). THERE SHALL BE NO FALL AT THE END OF APRON TO THE RECEIVING SURFACE.

CONDUIT OUTLET PROTECTION DETAIL

NOT TO SCALE MCN-SOIL-EROS-1600 05/01/17

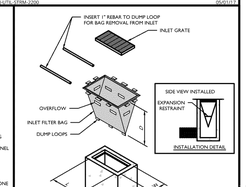

INLET PROTECTION (FILTER BAG) DETAIL

NOT TO SCALE MCN-SOIL-EROS-1500 09/01/14

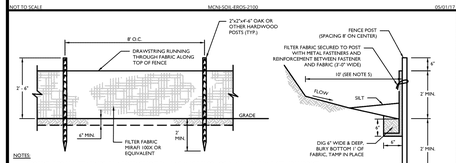
6" OF #57 CLEAN STONE BEDDING
DRAWSTRING RUNNING THROUGH FABRIC ALONG TOP OF FENCE
FENCE POST (SPACING 8' ON CENTER)
FILTER FABRIC SECURED TO POST WITH 3 TIES EVENLY SPACED APPROXIMATELY BETWEEN

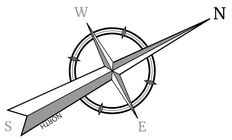

LEGEND

SOIL COMPACTION TESTING AREAS

RECOMMENDED SOIL COMPACTION TEST LOCATIONS

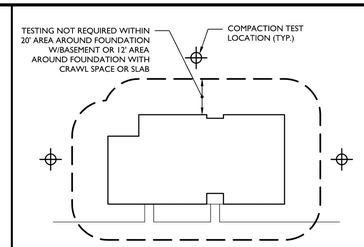

NOTES:

1. SOIL COMPACTION TESTING LOCATIONS IDENTIFIED ARE RECOMMENDED LOCATIONS FOR GRADED/DISTURBED AREAS WITHIN THE VICINITY OF BUILDINGS AND STRUCTURES OR ON INDIVIDUAL LOTS. MINIMUM TWO (2) TEST PITS PER LOT UP TO 1 ACRE OF DISTURBANCE.
2. FOR GRADED/DISTURBED AREAS WITHIN OPEN OR COMMON SPACES, SOIL COMPACTION TESTING SHALL BE PERFORMED AT TWO (2) TEST PITS PER ACRE OF OVERALL LIMIT OF DISTURBANCE, EVENLY DISTRIBUTED.

TYPICAL SOIL COMPACTION TESTING LOCATIONS DETAIL

NOT TO SCALE | MCNJ-SOIL-EROS-2802 | 12/01/17

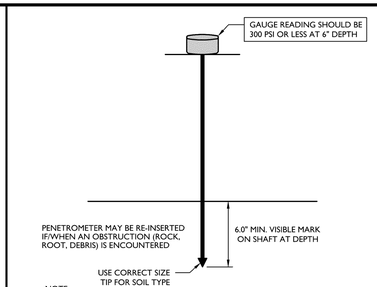

NOTE:

1. SOIL SHOULD BE MOIST BUT NOT SATURATED. DO NOT TEST WHEN SOIL IS EXCESSIVELY DRY OR SUBJECT TO FREEZING TEMPERATURES. SLOW, STEADY DOWNWARD PRESSURE USED TO ADVANCE THE PROBE. PROBE MUST PENETRATE AT LEAST 6" WITH LESS THAN 300 PSI READING ON THE GAUGE.
2. USE 1/2" TIP FOR FIRM SOIL, 3/4" TIP FOR SOFT SOIL.

HANDHELD SOIL PENETROMETER TEST DETAIL

NOT TO SCALE | MCNJ-SOIL-EROS-2801 | 12/01/17

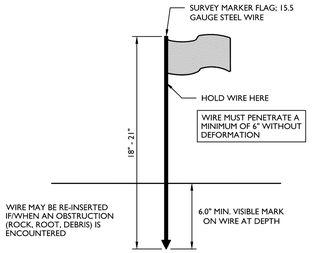

NOTES:

1. SOIL SHOULD BE MOIST BUT NOT SATURATED. DO NOT TEST WHEN SOIL IS EXCESSIVELY DRY OR SUBJECT TO FREEZING TEMPERATURES. SLOW, STEADY DOWNWARD PRESSURE USED TO ADVANCE THE WIRE.
2. RECORD THE DEPTH OF PENETRATION WHEN WIRE IS DEFORMED.

PROBING WIRE TEST DETAIL

NOT TO SCALE | MCNJ-SOIL-EROS-2800 | 12/01/17

SOIL DECOMPACTION AND TESTING REQUIREMENTS

EFFECTIVENAME

MOD: 04/07/25
05/01/18

A. SOIL COMPACTION TESTING REQUIREMENTS

1. SUBGRADE SOILS **PRIOR TO THE APPLICATION OF TOPSOIL** "STANDARD FOR VEGETATIVE COVER" NOTES SHALL BE FREE OF EXCESSIVE COMPACTION TO A **DEPTH OF 6.0 INCHES** TO ENHANCE THE ESTABLISHMENT OF PERMANENT VEGETATIVE COVER (SEE "STANDARD FOR VEGETATIVE COVER" NOTES FOR TOPSOIL REQUIREMENTS).
2. AREAS OF THE SITE WHICH ARE SUBJECT TO COMPACTION TESTING AND/OR MITIGATION ARE **GRAPHICALLY DENOTED** ON THE SOIL EROSION CONTROL PLAN. MINIMUM 2 TESTS FOR LIMIT OF DISTURBANCE UP TO 1 ACRE, PLUS 2 TESTS PER ACRE OF LIMIT OF DISTURBANCE THEREAFTER, SPACED EVENLY THROUGHOUT THE SITE.
3. COMPACTION TESTING LOCATIONS ARE DENOTED ON THE PLAN. A COPY OF THE PLAN SHALL BE USED TO MARK THE LOCATIONS OF TESTS AND ATTACHED TO THE **COMPACTION REMEDIATION FORM**, AVAILABLE FROM THE LOCAL SOIL CONSERVATION DISTRICT. THIS FORM MUST BE FILLED OUT AND SUBMITTED PRIOR TO RECEIVING A CERTIFICATE OF COMPLIANCE FROM THE DISTRICT.
4. IN THE EVENT THAT TESTING INDICATES COMPACTION IN EXCESS OF THE MAXIMUM THRESHOLDS INDICATED FOR THE PROBING OR PENETRATION TESTING METHODS (SEE DETAILS), THE CONTRACTOR/OWNER SHALL HAVE THE OPTION TO PERFORM EITHER (1) COMPACTION MITIGATION OVER THE ENTIRE MITIGATION AREA DENOTED ON THE PLAN (EXCLUDING EXEMPT AREAS), OR (2) PERFORM ADDITIONAL DENSITY TESTING TO ESTABLISH THE LIMITS OF EXCESSIVE COMPACTION WHEREUPON ONLY THE EXCESSIVELY COMPACTED AREAS WOULD REQUIRE COMPACTION MITIGATION. ADDITIONAL DENSITY TESTING SHALL BE PERFORMED BY A TRAINED, LICENSED PROFESSIONAL.

B. COMPACTION TESTING METHODS

1. PROBING WIRE TEST (SEE DETAIL)
2. HANDHELD PENETROMETER TEST (SEE DETAIL).
3. TUBE BULK DENSITY TEST (LICENSED PROFESSIONAL ENGINEER REQUIRED)
4. NUCLEAR DENSITY TEST (LICENSED PROFESSIONAL ENGINEER REQUIRED)
5. ADDITIONAL TESTING METHODS WHICH CONFORM TO ASTM STANDARDS AND SPECIFICATIONS, AND WHICH PRODUCE A DRY WEIGHT, SOIL BULK DENSITY MEASUREMENT MAY BE ALLOWED SUBJECT TO DISTRICT APPROVAL.

NOTE: SOIL COMPACTION TESTING IS NOT REQUIRED IF/WHEN SUBSOIL COMPACTION MITIGATION IS PROPOSED AS PART OF THE SEQUENCE OF CONSTRUCTION. FOR ADDITIONAL REQUIREMENTS AND EXEMPTIONS SEE SECTION 19 "STANDARD FOR LAND GRADING" OF THE STANDARD.

C. PROCEDURES FOR SOIL COMPACTION MITIGATION

1. PROCEDURES SHALL BE USED TO MITIGATE EXCESSIVE SOIL COMPACTION PRIOR TO PLACEMENT OF TOPSOIL AND ESTABLISHMENT OF PERMANENT VEGETATIVE COVER.
2. **RESTORATION OF COMPACTED SOILS SHALL BE THROUGH DEEP SCARIFICATION/TILLAGE (6" MINIMUM DEPTH)** WHERE THERE IS NO DANGER TO UNDERGROUND UTILITIES (CABLES, IRRIGATION SYSTEMS, ETC.).
3. IN THE ALTERNATIVE, ANOTHER METHOD AS SPECIFIED BY A NEW JERSEY LICENSED PROFESSIONAL ENGINEER MAY BE SUBSTITUTED SUBJECT TO DISTRICT APPROVAL.

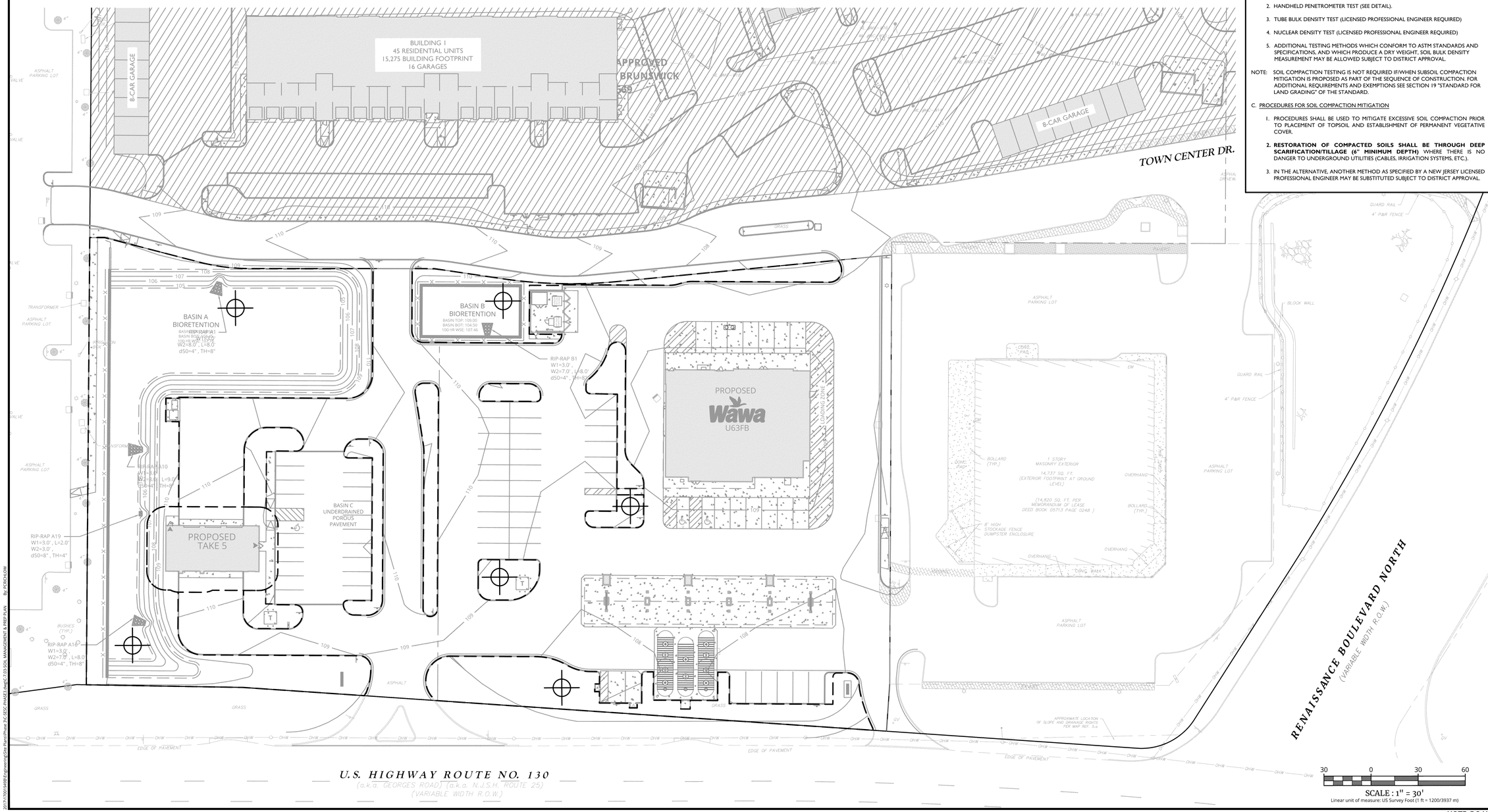

NOTE: DO NOT SCALE DRAWINGS FOR CONSTRUCTION.

Colliers Engineering & Design

www.colliersengineering.com

Copyright © 2025. Colliers Engineering & Design All Rights Reserved. This drawing and all the information contained herein is authorized for use only by the party for whom the services were contracted or to whom it is certified. This drawing may not be copied, reused, disclosed, distributed or relied upon for any other purpose without the express written consent of Colliers Engineering & Design.

Doing Business as MASER CONSULTING

PROTECT YOURSELF
ALL STATES REQUIRE NOTIFICATION OF EXCAVATORS, DESIGNERS, OR ANY PERSON PREPARING TO DISTURB THE EARTH'S SURFACE ANYWHERE IN ANY STATE

811 Know what's below. Call before you dig.

FOR STATE SPECIFIC DIRECT PHONE NUMBERS
VISIT: WWW.CALL811.COM

REV	DATE	DRAWN BY	DESCRIPTION
1	7/1/25	MB	REVISED FOR TOWNSHIP SUBMISSION.

Mark Lescavage
2025.07.02 11:35:22-04'00'

NEW JERSEY LICENSED PROFESSIONAL ENGINEER
LICENSE NUMBER: GE40346

Mark Lescavage
NEW JERSEY LICENSED PROFESSIONAL ENGINEER
LICENSE NUMBER: GE40346
COLLIERS ENGINEERING & DESIGN, INC.
N.J. C.O.A. #: 24GA27986500

PRELIMINARY AND FINAL MAJOR SITE PLAN & MAJOR SUBDIVISION PLAN

FOR

AMARANTH AT NORTH BRUNSWICK PHASES 3 & 4

BLOCK 148, LOT 1.01

TOWNSHIP OF NORTH BRUNSWICK
MIDDLESEX COUNTY
NEW JERSEY

Colliers Engineering & Design
HOLMDEL (Headquarters)
101 Crawfords Corner Road, Suite 3400
Holmdel, NJ 07733
Phone: 732.383.1950
COLLIERS ENGINEERING & DESIGN, INC. DOING BUSINESS AS MASER CONSULTING

SCALE:	DATE:	DRAWN BY:	CHECKED BY:
AS SHOWN	6/13/2025	RT	AJU

PROJECT NUMBER: 17001949B
DRAWING NAME: C-SESC-PHASE3

SHEET TITLE:
SOIL MANAGEMENT & PREPARATION PLAN

SHEET NUMBER:
7.03

2017\17001949B\Engineering\Site Plans\Phase 3\C-SESC-PHASE3.dwg\C-7.03-SOIL MANAGEMENT & PREP PLAN By: PCRICHLOW

LANDSCAPE PLAN NOTES

1. REFER TO SHEET **8.01** FOR GENERAL PLANTING NOTES AND LANDSCAPE DETAILS.
2. REFER TO SHEET **8.01** FOR PLANT SCHEDULES.
3. PLANT LOCATIONS INDICATED ON THE LANDSCAPE PLAN ARE APPROXIMATE; ACTUAL LOCATION OF PLANT MATERIAL IS SUBJECT TO SITE CONDITIONS.
4. THE LANDSCAPE PLAN SHALL TAKE PRECEDENCE OVER THE PLANT SCHEDULE SHOULD ANY PLANT MATERIAL DISCREPANCIES OCCUR.
5. LAWN AREAS SHALL BE STABILIZED WITH SEED UNLESS OTHERWISE INDICATED ON THE PLAN. REFER TO THE LAWN SEED MIX NOTES ON THE LANDSCAPE DETAILS SHEET AND THE SOIL EROSION AND SEDIMENT CONTROL PLAN FOR APPROVED SEED MIXTURES.
6. SOD SHALL BE A BLEND OF TURFGRASS SPECIES SUITABLE TO THE PROJECT LOCATION AND LOCALLY AVAILABLE.
7. ALL SHADE TREES PLANTED ADJACENT TO PEDESTRIAN WALKWAYS, VEHICLE ACCESSES, OR WITHIN A SIGHT TRIANGLE OR SIGHT EASEMENT SHALL BE BRANCHED A MINIMUM OF 7'-00" ABOVE GRADE AND/OR APPROPRIATELY PRUNED TO BE 7'-00" ABOVE GRADE. ALL SHRUBS WITHIN A SIGHT TRIANGLE OR SIGHT EASEMENT SHALL NOT EXCEED 30" ABOVE THE ELEVATION OF THE ADJACENT CURB AND ARE TO BE APPROPRIATELY PRUNED.

LANDSCAPE LEGEND

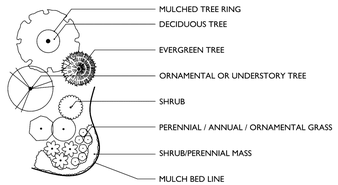

NOTES:
1. LANDSCAPE SYMBOLS ON THE PLAN VARY AND MAY DEVIATE FROM THE LANDSCAPE LEGEND SYMBOLS SHOWN ABOVE.

HATCH & SEED MIX KEY

PLANT SCHEDULE

CODE	QTY	BOTANICAL NAME	COMMON NAME	MAT. HT.	MAT. SPRD.	INSTL. HT.	MIN. CAL.	COND.	REMARKS
DECIDUOUS TREES									
ACRB	11	ACER RUBRUM `BOWHALL`	BOWHALL RED MAPLE	40'	20'	14' - 16'	3" - 3.5" CAL.	B&B	STRAIGHT, SYMMETRICAL, FULL CROWN, LOW BRANCHED
ACAS	15	ACER RUBRUM `ARMSTRONG`	ARMSTRONG RED MAPLE	40' - 60'	15' - 25'	14' - 16'	3" - 3.5" CAL.	B&B	STRAIGHT, SYMMETRICAL, FULL CROWN, LOW BRANCHED
BENH	8	BETULA NIGRA `HERITAGE`	HERITAGE RIVER BIRCH	50' - 70'	40' - 60'	14' - 16'	MULTISTEM	B&B	(3) STEMS, SYMMETRICAL, LOW BRANCHED, HEAVY
LIST	6	LIQUIDAMBAR STYRACIFLUA	SWEET GUM	60' - 80'	40' - 60'	14' - 16'	3" - 3.5" CAL.	B&B	STRAIGHT, SYMMETRICAL, FULL CROWN
QUPA	6	QUERCUS PALUSTRIS	PIN OAK	50' - 70'	40' - 60'	14' - 16'	3" - 3.5" CAL.	B&B	STRAIGHT, SYMMETRICAL, FULL CROWN
QUPH	3	QUERCUS PHELLOS	WILLOW OAK	40' - 70'	25' - 50'	14' - 16'	2'-3' HT.	B&B	STRAIGHT, SYMMETRICAL, FULL CROWN
TIAR	4	TILIA AMERICANA `REDMOND`	REDMOND AMERICAN LINDEN	50' - 70'	30' - 45'	14' - 16'	3" - 3.5" CAL.	B&B	STRAIGHT, SYMMETRICAL, FULL CROWN
ORNAMENTAL TREES									
CECA	3	CERCIS CANADENSIS	EASTERN REDBUD	20' - 30'	25' - 35'	9' - 10'	MULTISTEM	B&B	(3) STEMS, SYMMETRICAL, LOW BRANCHED
EVERGREEN TREES									
JUCC	23	JUNIPERUS CHINENSIS `HETZI COLUMNARIS`	HETZI COLUMN JUNIPER	10' - 15'	4' - 6'		6'-7'	B&B	STRAIGHT, SYMMETRICAL, DENSE, LOW BRANCHED
JUVE	6	JUNIPERUS VIRGINIANA	EASTERN REDCEDAR	30' - 60'	10' - 25'	8' - 10'		B&B	STRAIGHT, SYMMETRICAL, DENSE, LOW BRANCHED

CODE	QTY	BOTANICAL NAME	COMMON NAME	MAT. HT.	MAT. SPRD.	INSTL. HT.	INSTL. SPRD.	COND.	REMARKS
DECIDUOUS SHRUBS									
ABGR	25	ABELIA GRANDIFLORA `LITTLE RICHARD`	LITTLE RICHARD GLOSSY ABELIA	2' - 3'	2' - 3'	15" - 18"	15" - 18"	3 GAL.	DENSE, SYMMETRICAL, WELL FURNISHED
CLAL	22	CLETHRA ALNIFOLIA	SUMMERSWEET	3' - 6'	4' - 6	24" - 30"	24" - 30"	3 GAL.	DENSE, SYMMETRICAL, WELL FURNISHED
COSR	12	CORNUS SERICEA	RED TWIG DOGWOOD	6' - 9'	7' - 10'	3.5' - 4'	3' - 3.5'	5 GAL.	DENSE, SYMMETRICAL, WELL FURNISHED
COSB	14	CORNUS SERICEA `BAILEYI`	BAILEY'S REDTWIG DOGWOOD	6' - 10'	6' - 10'	3' - 3.5'	2.5' - 3'	3 GAL.	DENSE, SYMMETRICAL, WELL FURNISHED
RHAR	85	RHUS AROMATICA `GRO-LOW`	GRO-LOW FRAGRANT SUMAC	1.5' - 2'	6' - 8'	12" - 15"	24"-30"	3 GAL.	DENSE, SYMMETRICAL, WELL FURNISHED
VIDE	26	VIBURNUM DENTATUM	VIBURNUM	6' - 10'	6' - 10'	2.5' - 3'	2' - 2.5'	3 GAL.	DENSE, SYMMETRICAL, WELL FURNISHED
EVERGREEN SHRUBS									
ILCG	78	ILEX CRENATA `GREEN LUSTRE`	GREEN LUSTER JAPANESE HOLLY	4' - 6'	4' - 6'	2.5' - 3'	2.5' - 3'	3 GAL.	DENSE, SYMMETRICAL, WELL FURNISHED
ILGS	18	ILEX GLABRA `SHAMROCK`	SHAMROCK INKBERRY	3' - 4'	3' - 4'	18" - 24"	18" - 24"	3 GAL.	DENSE, SYMMETRICAL, WELL FURNISHED
PRLO	12	PRUNUS LAUROCERASUS `OTTO LUYKEN`	OTTO LUYKENS CHERRYLAUREL	3' - 4'	6' - 8'	18"-24"	24" - 30"	3 GAL.	DENSE, SYMMETRICAL, WELL FURNISHED
GROUND COVERS									
IRVR	518	IRIS VERSICOLOR	BLUE FLAG	2'	2'	#1 CAN	24" O.C.		DENSE, WELL ROOTED, FULL
LIMB	417	LIRIOPE MUSCARI `BIG BLUE`	BIG BLUE LILYTURF	1.5'	1.5'	#1 CAN	18" O.C.		DENSE, WELL ROOTED, FULL
GRASSES									
PEAH	96	PENNISETUM ALOPECUROIDES `HAMELN`	HAMELN DWARF FOUNTAIN GRASS	2'	2'	#1 CAN	24" O.C.		CLUMP, DENSE, WELL ROOTED

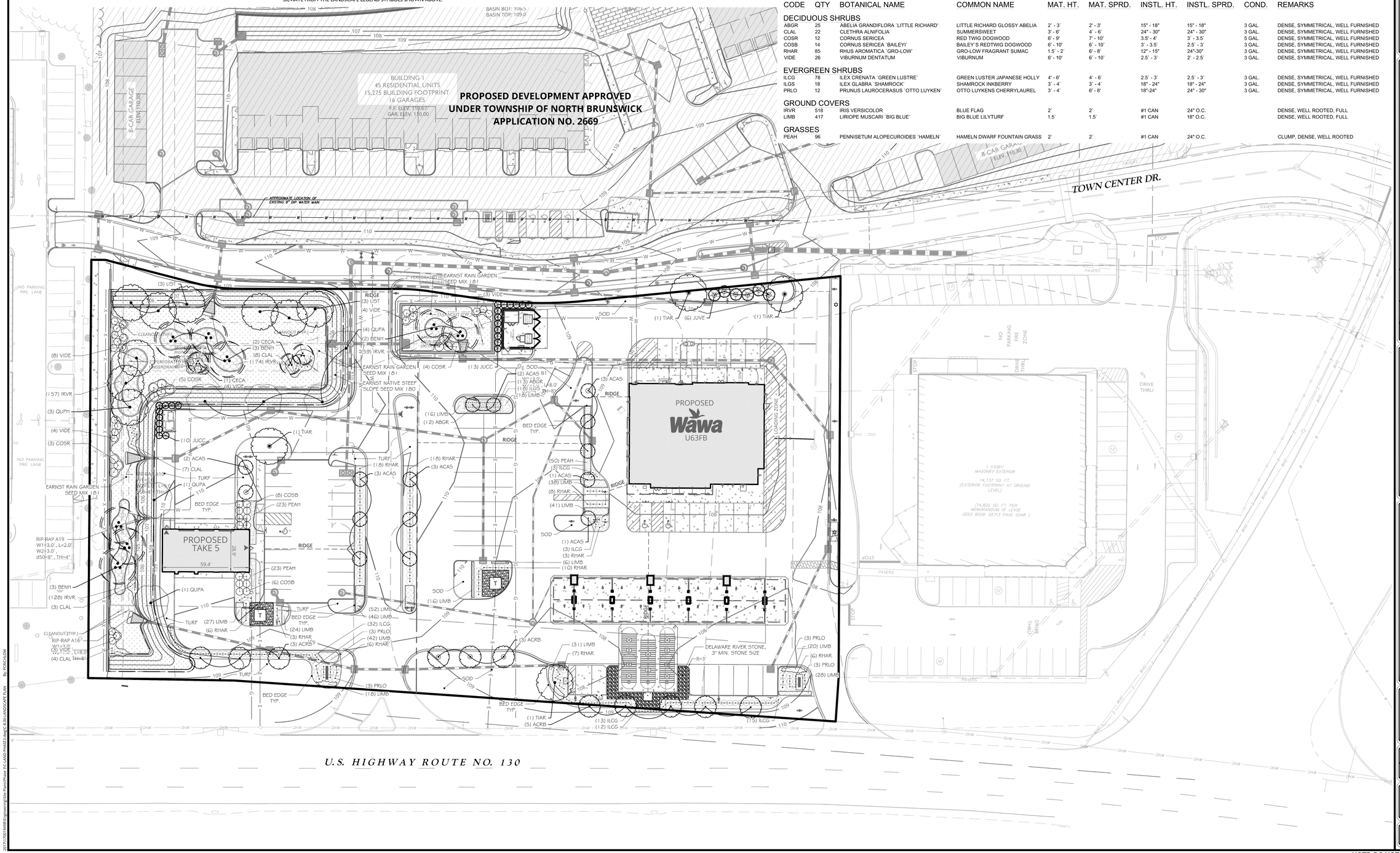

Colliers
Engineering & Design

www.colliersengineering.com

Copyright © 2025. Colliers Engineering & Design All Rights Reserved. This drawing and all the information contained herein is authorized for use only by the party for whom the services were contracted or to whom it is certified. This drawing may not be copied, reused, disclosed, distributed or relied upon for any other purpose without the express written consent of Colliers Engineering & Design.

Doing Business as MASER CONSULTING

PROTECT YOURSELF
ALL STATES REQUIRE NOTIFICATION OF EXCAVATORS, DESIGNERS, OR ANY PERSON PREPARING TO DISTURB THE EARTH'S SURFACE ANYWHERE IN ANY STATE

Know what's below. Call before you dig.

FOR STATE SPECIFIC DIRECT PHONE NUMBERS
VISIT: WWW.CALL811.COM

REV	DATE	DRAWN BY	DESCRIPTION
1	7/1/25	MB	REVISED FOR TOWNSHIP SUBMISSION.

Digitally signed by Chris Gammons
Date: 2025.07.02 12:11:52-04'00'

Christopher R. Gammons
NEW JERSEY LICENSED LANDSCAPE ARCHITECT
LICENSE NUMBER: AS01132
COLLIERS ENGINEERING & DESIGN, INC.
N.J. C.O.A. #: 24GA27986500

PRELIMINARY AND FINAL MAJOR SITE PLAN & MAJOR SUBDIVISION PLAN
FOR
AMARANTH AT NORTH BRUNSWICK PHASES 3 & 4

BLOCK 148, LOT 1.01

TOWNSHIP OF NORTH BRUNSWICK
MIDDLESEX COUNTY
NEW JERSEY

Colliers Engineering & Design
HOLMDEL (Headquarters)
101 Crawfords Corner Road, Suite 3400
Holmdel, NJ 07733
Phone: 732.383.1950
COLLIERS ENGINEERING & DESIGN, INC. DOING BUSINESS AS MASER CONSULTING

SCALE:	DATE:	DRAWN BY:	CHECKED BY:
AS SHOWN	6/13/2025	XXXXXX	XXXXXX

PROJECT NUMBER:	DRAWING NAME:
17001949B	C-LAND-PHASE3

SHEET TITLE:
LANDSCAPE PLAN

SHEET NUMBER:
8.00

NOTE: DO NOT SCALE DRAWINGS FOR CONSTRUCTION.

2017\17001949B\Engineering\Site Plans\Phase 3\C-LAND-PHASE3.dwg\C-8.00-LANDSCAPE PLAN By: JYONCHALOW

GENERAL PLANTING NOTES

LAND-GENL-PLNT-NOTE

MOD: 05/05/22
10/14/2021

A. GENERAL

1. THIS PLAN SHALL BE USED FOR LANDSCAPE PLANTING PURPOSES ONLY. EXAMINE ALL ENGINEERING DRAWINGS AND FIELD CONDITIONS FOR SPECIFIC LOCATIONS OF UTILITIES AND STRUCTURES. NOTIFY THE LANDSCAPE ARCHITECT OF ANY DISCREPANCIES OR LOCATION CONFLICTS PRIOR TO PLANTING INSTALLATION.

2. THE CONTRACTOR SHALL BE RESPONSIBLE FOR ALL UTILITIES MARKOUTS AND COMPLIANCE WITH ALL FEDERAL, STATE, OR LOCAL CODES, LAWFUL ORDERS OR REGULATIONS GOVERNING UPON THIS WORK.

3. OWNER OR HIS/HER REPRESENTATIVE SHALL BE NOTIFIED PRIOR TO BEGINNING PLANTING OPERATIONS.

B. PLANT MATERIAL

1. PLANT MATERIAL:

1.1. PLANT MATERIAL SHALL CONFORM WITH THE ANSI Z60.1-2014 'AMERICAN STANDARD FOR NURSERY STOCK' AS PUBLISHED BY AMERICANHORT IN REGARD TO QUALITY, SIZE OF PLANTING, SPREAD OF ROOTS, SIZE OF ROOTBALL, AND BRANCHING PATTERN.

1.2. PLANTS SHALL BE TYPICAL OF THEIR SPECIES AND VARIETY, HAVE NORMAL GROWTH HABITS, WELL DEVELOPED BRANCHES, DENSELY FOLIATED, VIGOROUS ROOT SYSTEMS, AND FREE FROM DEFECTS, INJURY, DISEASE, AND/OR INFESTATION, WITH ROOT BALLS INTACT.

1.3. ALL PLANT MATERIAL SHALL BEAR THE SAME RELATION TO FINISHED GRADE AT THE NURSERY. THE PLANT MATERIAL SHALL BE PLANTED AT THE SAME LEVEL WHEN PLANTED.

1.4. PLANT MATERIAL SHALL BE PLANTED ON THE DAY OF DELIVERY TO THE SITE. IN THE EVENT THIS IS NOT POSSIBLE, THE CONTRACTOR SHALL TAKE APPROPRIATE STEPS TO PROTECT THE PLANT MATERIAL FROM DAMAGE PRIOR TO INSTALLATION.

1.5. THE LANDSCAPE ARCHITECT OR OWNER SHALL HAVE THE RIGHT, AT ANY STAGE OF THE OPERATION, TO REJECT ANY AND ALL PLANT MATERIAL WHICH IN THEIR OPINION DOES NOT MEET THE REQUIREMENTS OF THESE PLANS.

2. PLANT QUANTITIES: THE LANDSCAPE PLAN SHOULD TAKE PRECEDENCE OVER THE PLANT SCHEDULE IF ANY PLANT DISCREPANCIES OCCUR.

3. PLANT SIZE: THE CONTRACTOR SHALL FURNISH PLANT MATERIAL IN THE CALIPER, HEIGHT, SIZE OR SPREAD INDICATED IN THE PLANT SCHEDULE.

4. SUBSTITUTIONS: NO PLANT SUBSTITUTIONS SHALL BE PERMITTED WITH REGARD TO SIZE, SPECIES, OR VARIETY WITHOUT WRITTEN PERMISSIONS OF THE MUNICIPALITY, LANDSCAPE ARCHITECT, OR OWNER. WRITTEN PROOF OF THE PLANT MATERIAL UNAVAILABILITY MUST BY DOCUMENTED BY THE CONTRACTOR.

5. GUARANTEE: PLANT MATERIAL SHALL BE GUARANTEED FOR **ONE (1) YEAR** AFTER THE DATE OF FINAL ACCEPTANCE. ANY PLANT MATERIAL THAT IS DEAD WITHIN THAT TIME PERIOD SHALL BE REMOVED, INCLUDING STUMP, AND REPLACED WITH A SIMILAR SIZE AND SPECIES AT THE EXPENSE OF THE CONTRACTOR WITHIN **ONE YEAR OR ONE** GROWING SEASON. TREE STAKES AND ARBOR TIES SHALL BE REMOVED AT THE END OF THE GUARANTEE PERIOD.

C. TOPSOIL REQUIREMENTS:

1. TOPSOIL REQUIREMENTS: SEE NJDOT SECTION 917 FOR REFERENCE AND SOIL ADDITIVES.

1.1. UNACCEPTABLE TOPSOIL SOURCES: DO NOT OBTAIN TOPSOIL FROM THE FOLLOWING SOURCES: AREAS CONTAINING CHEMICALLY CONTAMINATED SOILS. AREAS FROM WHICH THE ORIGINAL SURFACE HAS BEEN STRIPPED OR COVERED OVER, SUCH AS BORROW PITS, OPEN MINES, DEMOLITION SITES, DUMPS, LANDFILLS. NO TOPSOIL FROM WET EXCAVATION OR ACID PRODUCING SOILS.

1.2. TOPSOIL SHALL BE UNIFORM QUALITY, FREE FROM HARD CLODS, STIFF CLAY, HARD PAN, SODS, LARGE STONE, CEMENT, ASH, SLAG, CONCRETE, TAR, BOARDS, CHIPS, MULCH, OR ANY OTHER UNDESIRABLE MATERIALS. NO TOPSOIL SHALL BE DELIVERED IN A FROZEN OR MUDDY CONDITION.

1.3. TOPSOIL PH REQUIREMENTS ARE AS FOLLOWS: PH < 4.1 TOPSOIL IS UNACCEPTABLE. 4.1 ≤ PH < 5.8 ADD PULVERIZED LIME TO INCREASE THE PH TO 6.5 BEFORE USE. 5.8 ≤ PH < 7.0 TOPSOIL IS ACCEPTABLE. NO REMEDIATION NEEDED. 7.0 ≤ PH < 7.2 DECREASE PH TO AT LEAST 6.8 BEFORE USE. PH ≥ 7.2 TOPSOIL IS UNACCEPTABLE.

1.4. ORGANIC CONTENT. ENSURE THAT TOPSOIL HAS A MINIMUM ORGANIC CONTENT OF 2.75% BY WEIGHT. IF THE ORGANIC CONTENT IS LESS THAN 2.75%, INCREASE THE ORGANIC CONTENT BY ADDING SOIL ADDITIVES AT A RATE NECESSARY TO ATTAIN THE MINIMUM ORGANIC CONTENT. THE ORGANIC CONTENT SHALL NOT EXCEED 8% BY WEIGHT AND SHALL BE SAMPLED IN ACCORDANCE WITH THE ASSOCIATION OF AGRICULTURAL CHEMISTS.

1.5. GRADATION/PARTICLE SIZE. PROVIDE TOPSOIL CONFORMING TO THE PARTICLE SIZE REQUIREMENTS IN TABLE 917.01-2 AND THAT HAS NO MORE THAN 20 PERCENT RETAINED ON A NO. 10 SIEVE WHEN MECHANICALLY GRADED, THE DEPARTMENT WILL DETERMINE THE PARTICLE SIZE DISTRIBUTION FOR THE PORTION OF THE TOPSOIL PASSING THE NO. 10 SIEVE USING HYDROMETER ANALYSIS ACCORDING TO AASHTO T 88. SAND (2.0 MM TO 0.05 MM) 40 - 80% COMPOSITION. SILT (0.05 MM TO 0.005 MM) 0 - 30% COMPOSITION. CLAY (0.005 MM AND SMALLER) 10 - 30% COMPOSITION.

2. PREPARATION OF SUBGRADE:

2.1. HOLLOWS, DEPRESSIONS, AND GULLIES SHALL BE FILLED WITH ACCEPTABLE SANDY LOAM AS OUTLINED ABOVE OR SOIL AS DESCRIBED HEREON: SOIL TO BE ONE PART EACH OF TOPSOIL, MOISTENED PEAT MOSS, AND PARENT MATERIAL.

2.2. LOOSEN SUBSOIL BY SCARIFYING, RIPPING OR TILLING USING DISKS, HARROWS OR OTHER SUITABLE EQUIPMENT TO A DEPTH OF 4"-6" IMMEDIATELY BEFORE PLACING ANY TOPSOIL. REPEAT IN AREAS WHERE SEED OR PLANTINGS ARE PROPOSED AND THERE HAS BEEN COMPACTED SOIL.

3. TESTING AND APPROVAL OF SOILS:

3.1. THE CONTRACTOR SHALL SUBMIT A CERTIFIED REPORT SHOWING THE ANALYSIS OF REPRESENTATIVE SAMPLES OF TOPSOIL TESTING SHALL BE PERFORMED BY RUTGERS COOPERATIVE RESEARCH & EXTENSION TESTING LABORATORIES OR EQUIVALENT AS APPROVED BY STATE AND LOCAL REGULATIONS. PRICE BID SHALL INCLUDE ALL INSPECTION AND LABORATORY FEES.

D. PLANTING PROCEDURES

1. PLANTING BEDS:

1.1. PROVIDE PLANTING PITS AS INDICATED ON PLANTING DETAILS. BACKFILL PLANTING PITS WITH SOILS AS OUTLINED IN SECTION C PRIOR. BACKFILL SOIL TO BE AT MINIMUM ONE PART EACH OF TOPSOIL, MOISTENED PEAT MOSS, AND PARENT MATERIAL.

1.2. PLANTING BEDS SHALL RECEIVE FOUR (4) INCHES OF DOUBLE SHREDDED HARDWOOD MULCH AND TREATED WITH A PRE-EMERGENT HERBICIDE. NO MULCH SHALL COME IN DIRECT CONTACT WITH ROOT FLARE/COLLAR; UNDER NO CIRCUMSTANCES SHALL THE ROOT CROWN BE BURIED.

1.3. SHRUB MASSES SHALL BE PLANTED IN CONTINUOUS MULCHED BEDS.

2. PLANT LOCATIONS: THE LOCATION OF ALL PLANT MATERIAL INDICATED ON THE LANDSCAPE PLANS ARE APPROXIMATE. THE FINAL LOCATION OF ALL PLANT MATERIAL AND PLANTING BEDLINES SHALL BE DETERMINED IN THE FIELD AT THE TIME OF INSTALLATION FOLLOWING THE BASIC INTENT OF THE APPROVED PLANS, UNLESS THERE IS A SPECIFIC DIMENSION OR LOCATION SHOWN.

3. PLANTING DATES: PLANTING OPERATIONS SHALL BE PERFORMED DURING PERIODS WITHIN THE PLANTING SEASON WHEN WEATHER AND SOIL CONDITIONS ARE SUITABLE AND IN ACCORDANCE WITH ACCEPTED LOCAL PRACTICES. PLANTING SEASONS ARE DEFINED AS MARCH 15 THROUGH MAY 15 AND SEPT 15 THROUGH NOV 15. PLANTING IS ACCEPTABLE DURING THE WINTER MONTHS IF WEATHER PERMITS AND THE GROUND IS NOT FROZEN, AND IN THE SUMMER IF SUPPLEMENTAL WATERING IS PROVIDED. SOIL MUST BE FROST FREE, FRIABLE, AND NOT MUDDY AT TIME OF PLANTING.

4. PLANTING METHODS:

4.1. TREES SHALL BE SUPPORTED IMMEDIATELY AFTER PLANTING. PLANT MATERIAL SHALL BE PROPERLY GUYED, STAKED, AND PLANTED IN CONFORMANCE WITH THE TYPICAL PLANTING DETAILS.

4.1.1. STAKES SHALL BE EIGHT TO TEN FEET LONG, OF SOUND, DURABLE UNFINISHED LUMBER CAPABLE OF WITHSTANDING ABOVEGROUND AND UNDERGROUND CONDITIONS DURING THE PERIOD OF GUARANTEE WITH TOP AND BOTTOM DIMENSIONS OF TWO INCHES BY TWO INCHES IN DIAMETER

4.1.2. THREE STAKES SHALL BE EQUALLY SPACED ABOUT THE TREE IN A TRIANGULAR FASHION AND SHALL BE DRIVEN VERTICALLY INTO THE GROUND 2 ½ TO 3 FEET IN A MANNER THAT DOES NOT INJURE THE ROOT BALL.

4.1.3. TREES SHALL BE FASTENED TO EACH STAKE AT A HEIGHT OF FIVE FEET BY MEANS OF ARBOR TIE TREE TIE $\frac{1}{16}$" WIDE RECOMMENDED FOR TREES UP TO 2 ½ INCHES IN CALIPER).

4.2. SET PLANTS PLUMB AND STRAIGHT. SET AT SUCH LEVEL THAT AFTER SETTLEMENT A NORMAL OR NATURAL RELATIONSHIP TO THE CROWN OF THE PLANT WITH THE GROUND SURFACE WILL BE ESTABLISHED. LOCATE PLANTS IN CENTER OF PIT.

4.3. AT TIME OF INSTALLATION, THE CONTRACTOR SHALL WATER NEWLY INSTALLED PLANT MATERIAL. THE CONTRACTOR SHALL PROVIDE REGULAR WATERING TO ENSURE THE ESTABLISHMENT, GROWTH, AND SURVIVAL OF ALL PLANTS.

4.4. B&B PLANTS SHALL BE HANDLED FROM THE BOTTOM OF THE ROOTBALL ONLY. PLANTS WITH BROKEN, SPLIT, OR DAMAGED ROOTBALLS SHALL BE REJECTED.

4.5. CORD BINDING OF ALL B&B PLANTS SHALL BE CUT AND REMOVED, ALONG WITH THE BURLAP OF THE UPPER ⅓ OF THE ROOT BALL. ALL WIRE BASKETS ARE TO BE REMOVED PRIOR TO BACKFILLING PLANTING PIT.

E. MAINTENANCE

1. PRUNING:

1.1. EACH TREE AND SHRUB SHALL BE PRUNED IN ACCORDANCE WITH AMERICAN STANDARD FOR NURSERY STOCK TO PRESERVE THE NATURAL CHARACTER OF THE PLANT. ALL DEAD WOOD OR SUCKERS AND ALL BROKEN OR BADLY BRUISED BRANCHES SHALL BE REMOVED. PRUNING SHALL BE DONE WITH CLEAN, SHARP TOOLS.

1.2. SHADE TREES PLANTED NEAR PEDESTRIAN OR VEHICULAR ACCESS SHOULD NOT BE BRANCHED LOWER THAN 7'-0" ABOVE GRADE. PLANT MATERIAL LOCATED WITHIN SIGHT TRIANGLE EASEMENTS SHALL NOT EXCEED A MATURE HEIGHT OF 30" ABOVE THE ELEVATION OF THE ADJACENT CURB. STREET TREES PLANTED IN SIGHT TRIANGLE EASEMENTS SHALL BE PRUNED TO NOT TO HAVE BRANCHES BELOW 7'-0".

1.3. THE CENTRAL LEADER SHALL NOT BE CUT OR DAMAGED.

2. LAWN AREAS:

2.1. THE LANDSCAPE CONTRACTOR SHALL TEST THE SOIL TO CONFIRM SUITABILITY FOR THE PROPOSED SEED MIX AND SUPPLEMENT AS REQUIRED TO MEET THE REQUIRED PH & NUTRIENT LEVELS.

2.2. ALL DISTURBED AREAS SHALL BE STABILIZED WITH SEED UNLESS OTHERWISE INDICATED ON THE LANDSCAPE PLANS. SEED SHALL BE IN ACCORDANCE WITH THE LAWN SEED MIX NOTES AND THE SOIL EROSION AND SEDIMENT CONTROL DISTRICT'S SEED SPECIFICATIONS AS NOTED ON THE SOIL EROSION AND SEDIMENT CONTROL DETAILS SHEET.

2.3. SOD, IF SPECIFIED, SHALL CONSIST OF A STATE CERTIFIED MIXTURE. ALL DISTURBED AREAS INDICATED AS LAWN OR SOD SHALL BE TOPSOILED, LIMED, AND FERTILIZED & FINE GRADED PRIOR TO LAWN INSTALLATION.

3. EXISTING VEGETATION: EXISTING TREES AND SHRUBS TO BE PRESERVED ON SITE SHALL BE PROTECTED AGAINST CONSTRUCTION DAMAGE BY SNOW FENCING. FENCING SHALL BE PLACED OUTSIDE THE INDIVIDUAL TREE CANOPY. TREES TO REMAIN SHALL BE IDENTIFIED IN THE FIELD PRIOR TO COMMENCEMENT OF CONSTRUCTION. TREE PROTECTION FENCING SHALL BE INSTALLED PRIOR TO COMMENCEMENT OF CONSTRUCTION, GRADING, OR CLEARING. EXISTING VEGETATION BEING PRESERVED AND LOCATED AT THE EDGE OF THE NEW TREELINE SHALL BE PRUNED AND TRIMMED TO REMOVE ALL DEAD, DAMAGED, OR DISEASED BRANCHES.

4. SITE CLEANUP: PLANTING DEBRIS (WIRE, TWINE, RUBBERHOSE, BACKFILL, ETC.) SHALL BE REMOVED FROM THE SITE AFTER PLANTING IS COMPLETE. THE PROPERTY IS TO BE LEFT IN A NEAT, ORDERLY CONDITION IN ACCORDANCE WITH ACCEPTED PLANTING PRACTICES.

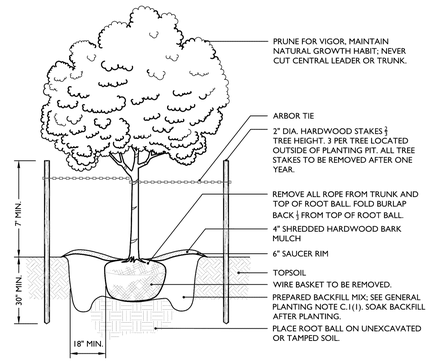

NOTES:

1. NO SOIL OR MULCH SHALL BE PLACED AGAINST ROOT COLLAR OF PLANT.
2. PLANTING DEPTH SHALL BE THE SAME OR HIGHER AS GROWN IN NURSERY.
3. PLANTING TO INCLUDE RIGID, OPEN MESH TRUNK GUARD.

DECIDUOUS TREE PLANTING DETAIL

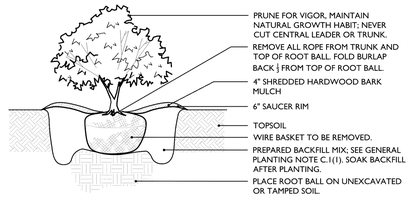

NOTES:

1. NO SOIL OR MULCH SHALL BE PLACED AGAINST ROOT COLLAR OF PLANT.
2. PLANTING DEPTH SHALL BE THE SAME OR HIGHER AS GROWN IN NURSERY.

SHRUB PLANTING DETAIL

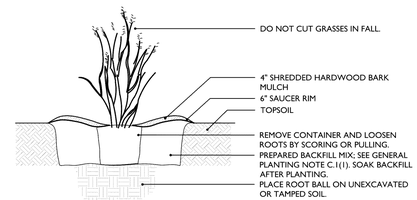

NOTES:

1. NO SOIL OR MULCH SHALL BE PLACED AGAINST ROOT COLLAR OF PLANT.
2. PLANTING DEPTH SHALL BE THE SAME OR HIGHER AS GROWN IN NURSERY.

ORNAMENTAL GRASS PLANTING DETAIL

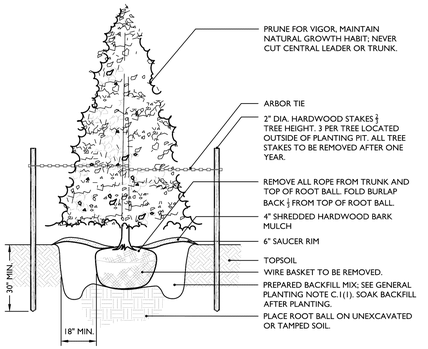

NOTES:

1. NO SOIL OR MULCH SHALL BE PLACED AGAINST ROOT COLLAR OF PLANT.
2. PLANTING DEPTH SHALL BE THE SAME OR HIGHER AS GROWN IN NURSERY.

EVERGREEN TREE PLANTING DETAIL

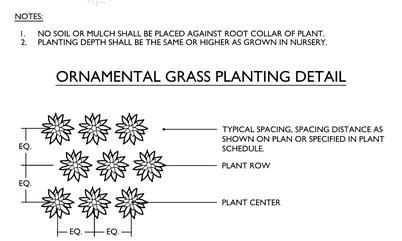

NOTES:

1. PLANTING DEPTH SHALL BE THE SAME OR HIGHER AS GROWN IN NURSERY.

GROUNDCOVER/PERENNIAL PLANTING DETAIL

WAWA LANDSCAPE NOTES

1. ALL TOPSOIL SHALL BE A MINIMUM 4" IN ALL SOD AREAS AND 8" IN TREE, SHRUB AND GROUND COVER BEDS, INCLUDING PARKING LOT ISLAND BEDS. IT SHALL BE APPROVED BY A CONSTRUCTION REPRESENTATIVE, PRIOR TO INSTALLATION.
2. PLANTING BEHIND PERPENDICULAR PARKING IS TO BE LOCATED A MINIMUM OF 5' BEHIND THE CURB LINE.
3. ALL LANDSCAPE AND GRASS AREAS ARE TO BE HAND RAKED AND LEFT CLEAR OF ALL STONES, ROCK, CONSTRUCTION DEBRIS AND ANY UNSUITABLE MATERIALS.
4. ALL LANDSCAPE AND GRASS AREAS ARE TO BE IRRIGATED BY AUTOMATIC SPRINKLER SYSTEM. (SEE IRRIGATION SPECIFICATION.)
5. LANDSCAPE CONTRACTOR WILL LOCATE ALL UNDERGROUND UTILITIES PRIOR TO ANY EXCAVATION AND PLANTING INSTALLATION.
6. ALL AREAS TO BE LANDSCAPED OR COVERED WITH STONE MUST BE TREATED WITH A PRE-EMERGENCE HERBICIDE (SURFLAN, DACTAL OR APPROVED EQUAL) IN ACCORDANCE WITH APPLICABLE FEDERAL, STATE REGULATIONS AND THE MANUFACTURER'S INSTRUCTIONS.
7. LANDSCAPE CONTRACTOR TO SUPPLY AND INSTALL A PERVIOUS WEED BARRIER (DEWITT, DUPONT OR APPROVED EQUAL) IN ACCORDANCE WITH MANUFACTURER'S INSTRUCTIONS WITHIN ALL LANDSCAPES, INCLUDING STONE AND MULCH BEDS. ALL WEED BARRIER WILL BE OVERLAPPED A MINIMUM OF 6" AT ALL SEAMS. AT PLANT LOCATIONS, BARRIER SHOULD BE CUT IN AN "X" PATTERN SO TO ACCOMMODATE ROOT BALL AND REPLACED AFTER PLANT HAS BEEN INSTALLED.
8. WEED BARRIER SHALL NOT BE VISIBLE IN AREAS DESIGNATED FOR STONE MULCH. WHEN STONE IS CALLED FOR ADJACENT TO CURB OR SIDEWALKS, IT SHALL BE FEATHERED DOWN TO CURB LEVEL FROM A DISTANCE 24" FROM THE CURB.
9. ALL PROPOSED LANDSCAPING TO BE NURSERY GROWN, TYPICAL OF THEIR SPECIES OR VARIETY. THEY ARE TO HAVE NORMAL VIGOROUS ROOT SYSTEMS, FREE FROM DEFECTS AND INFECTIONS AND IN ACCORDANCE WITH ANSI Z60.1
10. ALL PROPOSED PLANTINGS SHOULD BE INSTALLED PER STANDARDS OF THE 'AMERICAN ASSOCIATION OF NURSERYMEN' AND STATE NURSERY LANDSCAPE ASSOCIATIONS WITH REGARD TO PLANTING, PIT SIZE, BACKFILL MIXTURE, STAKING AND GUYING.
11. ALL PLANTING CONTAINERS AND BASKETS SHALL BE REMOVED DURING PLANTING. ALL PLANTS SHALL BE SET PLUMB AND POSITIONED SO THAT THE TOP OF THE ROOT COLLAR

    LAYERS AND COMPACT BACKFILL TO ELIMINATE VOIDS. CONTRACTOR SHALL PROVIDE A FOUR-INCH HIGH EARTHEN WATERING SAUCER ALONG THE PERIMETER OF EACH PLANTING PIT. CONTRACTOR SHALL WATER NEWLY PLANTED VEGETATION PRIOR TO MULCHING PLANTING PIT. ALL VOIDS SHALL BE FILLED AND SETTLING MITIGATED AS REQUIRED. ALUMINUM EDGING SHALL BE INSTALLED AROUND ALL PLANTING AREAS TO DELINEATE BETWEEN DIFFERENT LANDSCAPE MATERIALS.
12. AFTER INITIAL WATERING AND PRIOR TO MULCHING, CONTRACTOR SHALL APPLY HERBICIDES AND PRE EMERGENT HERBICIDES AS REQUIRED TO ELIMINATE ANY WEED SEEDS OR PLANTS PRESENT ON ROOT BALL.
13. ALL PLANTING BEDS AND PITS EXCEPT FOR LANDSCAPE ISLANDS ADJACENT TO THE BUILDING AND DESIGNATED AREA AT THE FUEL VENT STACKS, SHALL BE MULCHED WITH DOUBLE GROUND HARDWOOD MULCH AT A MINIMUM DEPTH OF 3'. LANDSCAPE ISLANDS ADJACENT TO DESIGNATED AREA AT FUEL STACKS SHALL BE MULCHED WITH 1'- 3" "RIVER STONE" MULCH. FOR LANDSCAPES ADJACENT TO BUILDING, CONTACT PROJECT ENGINEER.
14. SEEDBED PREPARATION

    A. APPLY LIMESTONE AND FERTILIZER ACCORDING TO SOIL TESTS OR FERTILIZER MAY BE APPLIED AT THE RATE OF 260 POUNDS PER ACRE OR 6 POUNDS PER 1000 SQUARE FEET USING 10-20-10 OR EQUIVALENT. IN ADDITION, 300 POUNDS 4-1-2 PER ACRE OR EQUIVALENT OF SLOW RELEASE NITROGEN MAY BE USED IN LIEU OF TOPDRESSING.

    B. WORK LIME AND FERTILIZER INTO THE SOIL AS PRACTICAL TO A DEPTH OF 4-INCHES WITH A DISC, SPRING TOOTH HARROW OR OTHER SUITABLE EQUIPMENT. THE FINAL HARROWING OR DISKING OPERATION SHOULD PARALLEL TO THE GENERAL CONTOUR. CONTINUE TILLAGE UNTIL A REASONABLE UNIFORM, FINE SEEDBED IS PREPARED. ALL BUT CLAY OR SILTY SOILS AND COARSE SANDS SHOULD BE ROLLED TO FIRM THE SEEDBED WHEREVER FEASIBLE.

    C. INSPECT SEEDBED JUST BEFORE SEEDING. IF TRAFFIC HAS LEFT THE SOIL COMPACTED, THE AREA MUST BE RETILLED AND FIRMED AS OUTLINED BELOW.

    D. GRASS SEEDING MIXTURE AND APPLICATION RATE:

PERCENTAGE OF TOTAL WEIGHT	APPLICATION RATE	SEED TYPE	MINIMUM GERMINATION ALLOWED
60%	57 LBS/1000 S.F.	"REBEL" TALL FESCUE	90 - 97
35%		"YORKTOWN" PERENNIAL RYE	90 - 98
5%		"STREEKER" REDTOP	90 - 92

    E. IN AREAS DESIGNATED AS SOD, FESCUE SOD IS TO BE INSTALLED ON MINIMUM 4" TOPSOIL. AREAS TO BE SODDED ARE TO BE PREPARED AS NOTED ABOVE FOR SEEDED AREAS.
15. PLANT MATERIAL SHALL BE GUARANTEED FOR TWO YEARS FROM THE DATE OF SUBSTANTIAL COMPLETENESS. THE CONTRACTOR SHALL REPLACE PLANTS, DEAD, UNHEALTHY, DYING OR DAMAGED THROUGH LOSS OF BRANCHES AND/OR FOLIAGE. LAWNS THAT ARE NOT IN GOOD CONDITION AT THE END OF THE GUARANTEE PERIOD SHALL BE REPAIRED UNTIL A GOOD LAWN RESULTS. *IT IS UNDERSTOOD THAT THE OWNER SHALL ASSUME RESPONSIBILITY FOR WATERING ALL PLANT MATERIAL AND LAWN AREA BEGINNING WITH THE DATE OF SUBSTANTIAL COMPLETENESS.*
16. ALL PARKING STALL PLANTINGS TO BE SET BACK 5' FROM CURB WHERE FEASIBLE.

ERNST SEEDS

Ernst Conservation Seeds
8884 Mercer Pike
Meadville, PA 16335
(800) 873-3321 Fax (814) 336-5191
www.ernstseed.com

Date: April 17, 2025

Native Steep Slope Mix w/Annual Ryegrass - ERNMX-181

	Botanical Name	Common Name	Price/Lb
29.00 %	*Andropogon gerardii, 'Prairie View'-IN Ecotype*	Big Bluestem, 'Prairie View'-IN Ecotype	12.43
20.00 %	*Lolium multiflorum*	Annual Ryegrass	1.30
15.50 %	*Sorghastrum nutans, PA Ecotype*	Indiangrass, PA Ecotype	18.13
13.40 %	*Elymus virginicus, Madison-NY Ecotype*	Virginia Wildrye, Madison-NY Ecotype	11.10
6.60 %	*Elymus canadensis*	Canada Wildrye	16.79
4.00 %	*Agrostis perennans, Albany Pine Bush-NY Ecotype*	Autumn Bentgrass, Albany Pine Bush-NY Ecotype	23.40
2.80 %	*Panicum clandestinum, Tioga*	Deertongue, Tioga	23.87
2.80 %	*Panicum virgatum, 'Habitat'-NJ Ecotype*	Switchgrass, 'Habitat'-NJ Ecotype	10.65
1.20 %	*Tridens flavus, Fort Indiantown Gap-PA Ecotype*	Purpletop, Fort Indiantown Gap-PA Ecotype	41.96
1.00 %	*Chamaecrista fasciculata, PA Ecotype*	Partridge Pea, PA Ecotype	13.00
1.00 %	*Rudbeckia hirta*	Blackeyed Susan	33.80
0.70 %	*Coreopsis lanceolata*	Lanceleaf Coreopsis	31.20
0.70 %	*Echinacea purpurea*	Purple Coneflower	46.80
0.60 %	*Heliopsis helianthoides, PA Ecotype*	Oxeye Sunflower, PA Ecotype	36.40
0.30 %	*Aster pilosus, PA Ecotype*	Heath Aster, PA Ecotype	286.00
0.20 %	*Monarda fistulosa, Fort Indiantown Gap-PA Ecotype*	Wild Bergamot, Fort Indiantown Gap-PA Ecotype	104.00
0.10 %	*Apocynum cannabinum, PA Ecotype*	Indianhemp, PA Ecotype	234.00
0.10 %	*Asclepias syriaca, PA Ecotype*	Common Milkweed, PA Ecotype	104.00
100.00 %		**Mix Price/Lb Bulk:**	**$14.31**

Seeding Rate: 60 lb per acre, or 1.5 lb per 1,000 sq ft

Erosion Control & Revegetation; Grasses & Grass-like Species - Herbaceous Perennial; Herbaceous Flowering Species - Herbaceous Perennial

The native grass and forb species tolerate poor soils typically found on steep slopes in the eastern United States. Mix formulations are subject to change without notice depending on the availability of existing and new products. While the formula may change, the guiding philosophy and function of the mix will not.

ERNST SEEDS

Ernst Conservation Seeds
8884 Mercer Pike
Meadville, PA 16335
(800) 873-3321 Fax (814) 336-5191
www.ernstseed.com

Date: April 17, 2025

Rain Garden Mix - ERNMX-180

	Botanical Name	Common Name	Price/Lb
25.60 %	*Schizachyrium scoparium, Fort Indiantown Gap-PA Ecotype*	Little Bluestem, Fort Indiantown Gap-PA Ecotype	20.40
20.00 %	*Elymus virginicus, Madison-NY Ecotype*	Virginia Wildrye, Madison-NY Ecotype	11.10
9.00 %	*Carex vulpinoidea, PA Ecotype*	Fox Sedge, PA Ecotype	33.80
8.00 %	*Echinacea purpurea*	Purple Coneflower	46.80
7.80 %	*Chasmanthium latifolium, WV Ecotype*	River Oats, WV Ecotype	104.00
6.80 %	*Panicum rigidulum, PA Ecotype*	Redtop Panicgrass, PA Ecotype	78.00
3.00 %	*Coreopsis lanceolata*	Lanceleaf Coreopsis	31.20
3.00 %	*Rudbeckia hirta*	Blackeyed Susan	33.80
2.50 %	*Verbena hastata, PA Ecotype*	Blue Vervain, PA Ecotype	41.60
2.00 %	*Chamaecrista fasciculata, PA Ecotype*	Partridge Pea, PA Ecotype	13.00
2.00 %	*Panicum clandestinum, Tioga*	Deertongue, Tioga	23.87
1.50 %	*Asclepias incarnata, PA Ecotype*	Swamp Milkweed, PA Ecotype	192.40
1.50 %	*Heliopsis helianthoides, PA Ecotype*	Oxeye Sunflower, PA Ecotype	36.40
1.30 %	*Penstemon digitalis, PA Ecotype*	Tall White Beardtongue, PA Ecotype	182.00
1.20 %	*Zizia aurea, PA Ecotype*	Golden Alexanders, PA Ecotype	78.00
0.70 %	*Pycnanthemum tenuifolium*	Narrowleaf Mountainmint	260.00
0.50 %	*Aster novae-angliae*	New England Aster	390.00
0.50 %	*Baptisia australis, Southern WV Ecotype*	Blue False Indigo, Southern WV Ecotype	104.00
0.50 %	*Juncus effusus*	Soft Rush	52.00
0.50 %	*Juncus tenuis, PA Ecotype*	Path Rush, PA Ecotype	52.00
0.50 %	*Senna hebecarpa, VA & WV Ecotype*	Wild Senna, VA & WV Ecotype	31.20
0.50 %	*Vernonia noveboracensis, PA Ecotype*	New York Ironweed, PA Ecotype	286.00
0.30 %	*Monarda fistulosa, Fort Indiantown Gap-PA Ecotype*	Wild Bergamot, Fort Indiantown Gap-PA Ecotype	104.00
0.20 %	*Aster lateriflorus*	Calico Aster	364.00
0.20 %	*Solidago nemoralis, PA Ecotype*	Gray Goldenrod, PA Ecotype	312.00
0.10 %	*Aster pilosus, PA Ecotype*	Heath Aster, PA Ecotype	286.00
0.10 %	*Eupatorium perfoliatum, PA Ecotype*	Boneset, PA Ecotype	208.00
0.10 %	*Mimulus ringens, PA Ecotype*	Square Stemmed Monkeyflower, PA Ecotype	260.00
0.10 %	*Solidago juncea, PA Ecotype*	Early Goldenrod, PA Ecotype	364.00
100.00 %		**Mix Price/Lb Bulk:**	**$47.28**

Seeding Rate: 20 lb per acre with a cover crop. For sites that drain within 24 hours of a rain event use one of the following cover crops:Oats (1 Jan to 31 Jul; 30 lbs/acre), Japanese Millet (1 May to 31 Aug; 10 lbs/acre), or grain rye (1 Aug to 31 Dec; 30 lbs/acre).

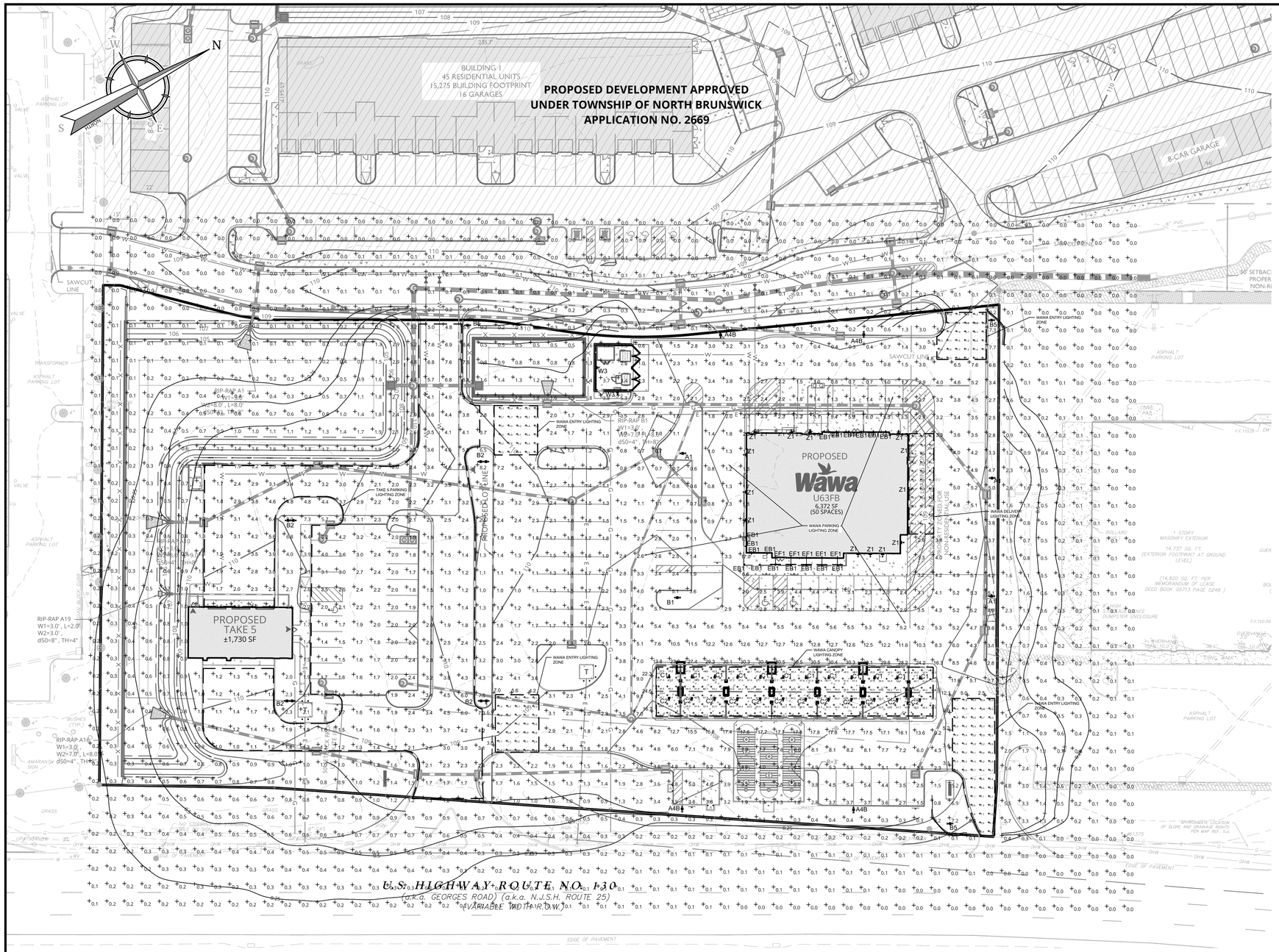

GENERAL NOTES

1. THIS SHEET IS TO BE USED FOR LIGHTING PURPOSES ONLY.
2. REFER TO SHEET 1 FOR GENERAL NOTES.

LIGHTING PLAN NOTES

1. REFER TO SHEET **9.01 & 9.02** FOR LIGHTING DETAILS AND ORDERING INFORMATION.
2. LIGHT LEVELS ON PLAN REPRESENT AVERAGE MAINTAINED FOOTCANDLE LEVELS AT FINISHED EXTERIOR GRADE.
3. ALL MOUNTING HEIGHTS ARE MEASURED FROM FINISHED EXTERIOR GRADE TO LIGHT SOURCE.
4. POLE LOCATIONS MAY VARY DUE TO SITE CONDITIONS. CONTRACTOR TO FIELD VERIFY POLE LOCATIONS PRIOR TO INSTALLATION TO ACCOMMODATE UTILITIES, PAVEMENTS, FENCES, ETC.
5. UNDERGROUND CONDUIT LOCATIONS SHALL BE COORDINATED WITH THE PROPOSED TREE LOCATIONS.
6. CONCRETE FOOTING FOR POLE MOUNTED LIGHTS TO BE DESIGNED BY OTHERS. FOOTING DETAIL TO BE SUBMITTED FOR APPROVAL PRIOR TO CONSTRUCTION.
7. ELECTRICAL WIRING DESIGN FOR SITE LIGHTING TO BE DESIGNED BY OTHERS.
8. ARCHITECTURAL LIGHTING FOR BUILDINGS TO BE DESIGNED BY OTHERS. COORDINATE ALL BUILDING-MOUNTED FIXTURES AND LOCATIONS WITH ARCHITECT AND ARCHITECTURAL ELEVATION DRAWINGS.
9. SITE LIGHTING SUBSTITUTIONS WILL NOT BE PERMITTED UNLESS SUBSTITUTIONS ARE SUBMITTED AND APPROVED.
10. LUMINAIRES TO BE MANUFACTURED BY **LITHONIA LIGHTING, WAC LIGHTING, FC LIGHTING AND COOPER LIGHTING SOLUTIONS** OR EQUIVALENT AS APPROVED BY LANDSCAPE ARCHITECT.
11. PROPOSED LIGHTS SHALL BE EQUIPPED WITH SENSORS, TIMERS, OR THE MANUFACTURER CONTROL SYSTEM SO THE PROPOSED LIGHTS CAN BE DIMMED OR TURNED OFF AFTER OCCUPATION HOURS. ONLY SPECIFIC LIGHTING FOR SECURITY PURPOSES SHALL REMAIN ON AFTER OCCUPATION HOURS. SECURITY LIGHTING SHALL BE DETERMINED BY THE OWNER AND CONTRACTOR.

OVERALL LIGHTING STATISTICS

AREA DESCRIPTION	SYMBOL	AVERAGE	MAXIMUM	MINIMUM	MAX/MIN	AVG/MIN
WAWA PARKING	+	4.8 FC	30.5 FC	0.3 FC	101.67 : 1.0	16.16 : 1.0
WAWA CANOPY	+	50.4 FC	64.5 FC	21.0 FC	3.07 : 1.0	2.40 : 1.0
WAWA DELIVERY	+	3.1 FC	3.7 FC	2.5 FC	1.48 : 1.0	1.23 : 1.0
WAWA ENTRANCES & EXITS	+	4.6 FC	9.2 FC	0.6 FC	15.33 : 1.0	7.72 : 1.0
TAKE 5 PARKING	+	2.7 FC	8.4 FC	1.0 FC	8.4 : 1.0	2.68 : 1.0
UNDEFINED	+	0.6 FC	8.2 FC	0.0 FC	N/A	N/A
NJSH CURBLINE	+	0.2 FC	0.5 FC	0.1 FC	N/A	N/A

OVERALL LIGHTING SCHEDULE

SYMBOL	LABEL	QTY	CATALOG NUMBER	LAMP	LUMENS PER LAMP	WATTAGE	LLF	MOUNT HT.	POLE
	A1	3	DSX0 LED P6 50K 70CRI T4M	LED	17468	137	1.0	20'	N/A
	A4B	4	DSX0 LED P6 50K 80CRI BLC4	LED	12704	137	1.0	20'	N/A
	B1	1	DSX0 LED P6 50K 70CRI T4M	LED	17728	137	1.0	20'	N/A
	B2	4	DSX0 LED P6 50K 70CRI T4M	LED	17728	137	1.0	20'	N/A
	B5	3	DSX0 LED P6 50K 70CRI LCCO	LED	12822	137	1.0	20'	N/A
	C1	12	RCNY LED SYMC ALO2 Setting 5 80CRI 50K MVOLT	LED	15758	89	1.0	18.21'	N/A
	C2	12	RCNY LED SYMC ALO2 Setting 5 80CRI 50K MVOLT	LED	15758	89	1.0	16.21'	N/A
	EB1	17	WP-LED119-30	LED	1388	19	1.0	10.5'	N/A
	EF1	5	CVLWET1.5-4-UNV-4K-10X40	LED	992	36	1.0	12'	N/A
	W3	2	DSXW1 P2 50K T3M HS	LED	1994	15	1.0	8'	N/A
	Z1	13	RT403CA-26L40T3R-MDL05	LED	3348	23	1.0	15'	N/A

30 0 30 60

SCALE : 1" = 30'

Linear unit of measure: US Survey Foot (1 ft = 1200/3937 m)

NOTE: DO NOT SCALE DRAWINGS FOR CONSTRUCTION.

Colliers Engineering & Design

www.colliersengineering.com

Copyright © 2025. Colliers Engineering & Design All Rights Reserved. This drawing and all the information contained herein is authorized for use only by the party for whom the services were contracted or to whom it is certified. This drawing may not be copied, reused, disclosed, distributed or relied upon for any other purpose without the express written consent of Colliers Engineering & Design.

Doing Business as MASER CONSULTING

PROTECT YOURSELF
ALL STATES REQUIRE NOTIFICATION OF EXCAVATORS, DESIGNERS, OR ANY PERSON PREPARING TO DISTURB THE EARTH'S SURFACE ANYWHERE IN ANY STATE

FOR STATE SPECIFIC DIRECT PHONE NUMBERS
VISIT: WWW.CALL811.COM

REV	DATE	DRAWN BY	DESCRIPTION
1	7/1/25	MB	REVISED FOR TOWNSHIP SUBMISSION.

Digitally signed by Chris Gammons
Date: 2025.07.02 12:14:18-04'00'

Christopher R. Gammons
NEW JERSEY LICENSED LANDSCAPE ARCHITECT
LICENSE NUMBER: AS01132
COLLIERS ENGINEERING & DESIGN, INC.
N.J. C.O.A. #: 24GA27986500

PRELIMINARY AND FINAL MAJOR SITE PLAN & MAJOR SUBDIVISION PLAN

FOR

AMARANTH AT NORTH BRUNSWICK PHASES 3 & 4

BLOCK 148, LOT 1.01

TOWNSHIP OF NORTH BRUNSWICK
MIDDLESEX COUNTY
NEW JERSEY

Colliers Engineering & Design
HOLMDEL (Headquarters)
101 Crawfords Corner Road, Suite 3400
Holmdel, NJ 07733
Phone: 732.383.1950
COLLIERS ENGINEERING & DESIGN, INC. DOING BUSINESS AS MASER CONSULTING

SCALE:	DATE:	DRAWN BY:	CHECKED BY:
AS SHOWN	6/13/2025	RL	CG

PROJECT NUMBER: 170019498
DRAWING NAME: C-LIGHT-PHASE3

SHEET TITLE: LIGHTING PLAN

SHEET NUMBER: 9.00

2017\170019498\Engineering\Site Plans\Phase 3\C-LIGHT-PHASE3.dwg\C-9.00-LIGHTING By: PCRICKLOW

LIGHTING FIXTURE 'A1, A4B, B1, B2 & B5'

SYMBOL	LABEL	QTY	MODEL #
	A1	3	DSX0 LED P6 50K 70CRI T4M
	A4B	4	DSX0 LED P6 50K 80CRI BLC4
	B1	1	DSX0 LED P6 50K 70CRI T4M
	B2	4	DSX0 LED P6 50K 70CRI T4M
	B5	3	DSX0 LED P6 50K 70CRI LCCO

LIGHTING FIXTURE 'C1 & C2'

SYMBOL	LABEL	QTY	MODEL #
	C1	12	RCNY LED SYMC ALO2 Setting 5 80CRI 50K MVOLT
	C2	12	RCNY LED SYMC ALO2 Setting 5 80CRI 50K MVOLT

LIGHTING FIXTURE 'EB1'

SYMBOL	LABEL	QTY	MODEL #
	EB1	17	WP-LED119-30

LIGHTING FIXTURE 'EF1'

SYMBOL	LABEL	QTY	MODEL #
	EF1	5	CVLWET1.5-4-UNV-4K-10X40

D-Series Size 0
LED Area Luminaire

Catalog Number

Notes

Type

Hit the Tab key or mouse over the page to see all interactive elements.

Introduction

The modern styling of the D-Series features a highly refined aesthetic that blends seamlessly with its environment. The D-Series offers the benefits of the latest in LED technology into a high performance, high efficacy, long-life luminaire.

The photometric performance results in sites with excellent uniformity, greater pole spacing and lower power density. D-Series outstanding photometry aids in reducing the number of poles required in area lighting applications, with typical energy savings of 70% and expected service life of over 100,000 hours.

Specifications

EPA:	0.44 ft² (0.04 m²)
Length:	26.18" (66.5 cm)
Width:	14.06" (35.7 cm)
Height H1:	2.26" (5.7 cm)
Height H2:	7.46" (18.9 cm)
Weight:	23 lbs (10.4 kg)

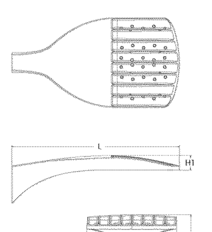

design select

Items marked by a shaded background qualify for the Design Select program and ship in 15 days or less. To learn more about Design Select, visit www.acuitybrands.com/designselect.
*See ordering tree for details

Design Select options indicated by this color background.

Ordering Information

EXAMPLE: DSX0 LED P6 40K 70CRI T3M MVOLT SPA NLTAIR2 PIRHN DDBXD

DSX0 LED

Series	LEDs	Color temperature	Color Rendering Index	Distribution		Voltage	Mounting
DSX0 LED	Forward optics: P1, P2, P3, P4, P5, P6, P7; Rotated optics: P10, P11, P12, P13	(this section 70CRI only) 30K 3000K, 40K 4000K, 50K 5000K; 27K 2700K, 30K 3000K, 35K 3500K, 40K 4000K, 50K 5000K	70CRI, 70CRI, 70CRI; 80CRI, 80CRI, 80CRI, 80CRI, 80CRI	AFR Automotive front row; T1S Type I short; T2M Type II medium; T3M Type III medium; T3LG Type III low glare; T4M Type IV medium; T4LG Type IV low glare; TFTM Forward throw medium	T5M Type V medium; T5LG Type V low glare; T5W Type V wide; BLC3 Type III backlight control; BLC4 Type IV backlight control; LCCO Left corner cutoff; RCCO Right corner cutoff	MVOLT (120V-277V); HVOLT (347V-480V); XVOLT (277V-480V); 120; 208; 240; 277; 347; 480	Shipped included: SPA Square pole mounting (#8 drilling, 3.5" min. SQ pole); RPA Round pole mounting (#8 drilling, 3" min. RND pole); SPA5 Square pole mounting (#5 drilling, 3" min. SQ pole); RPA5 Round pole mounting (#5 drilling, 3" min. RND pole); SPA8N Square narrow pole mounting (#8 drilling, 3" min. SQ pole); WBA Wall bracket; MA Mast arm adapter (mounts on 2 3/8" OD horizontal tenon)

Control options		Other options	Finish (required)
Shipped installed: NLTAIR2 PIRHN nLight AIR gen 2 enabled with bi-level motion / ambient sensor, 8-40' mounting height, ambient sensor enabled at 2fc; PIR High/low, motion/ambient sensor, 8-40' mounting height, ambient sensor enabled at 2fc; PER NEMA twist-lock receptacle only (controls ordered separate); PER5 Five-pin receptacle only (controls ordered separate)	PER7 Seven-pin receptacle only (controls ordered separate); FAO Field adjustable output; BL30 Bi-level switched dimming, 30%; BL50 Bi-level switched dimming, 50%; DMG 0-10v dimming wires pulled outside fixture (for use with an external control, ordered separately)	Shipped installed: HS Houseside shield (black finish standard); L90 Left rotated optics; R90 Right rotated optics; CCE Coastal Construction; HA 50°C ambient operation; BAA Buy America(n) Act and/or Build America Buy America Qualified; SF Single fuse (120, 277, 347V); DF Double fuse (208, 240, 480V). Shipped separately: EGSR External Glare Shield (reversible, field install required, matches housing finish); BSDB Bird Spikes (field install required)	DDBXD Dark Bronze; DBLXD Black; DNAXD Natural Aluminum; DWHXD White; DDBTXD Textured dark bronze; DBLBXD Textured black; DNATXD Textured natural aluminum; DWHGXD Textured white

© 2011-2025 Acuity Brands Lighting, Inc. All rights reserved.

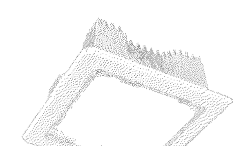

RCNY LED
Recessed LED Canopy/Ceiling Luminaire

Catalog Number

Notes

Type

Hit the Tab key or mouse over the page to see all interactive elements.

Introduction

The RCNY LED recessed luminaire is designed to provide exceptional energy savings and versatility in one fixture. With a compact design the RCNY provides superior illumination while blending into the canopy space seamlessly. The RCNY is unique in that as a recessed canopy it can be installed in both 12" and 16" canopy decks. Features such as Adjustable Lumen Output Dial with 8 Settings and forward throw distribution (ASYC) option make the RCNY one of the most versatile gas station canopies in the market. Lumen dial and driver are both accessible from below. With up to 179 LPW the RCNY LED delivers up to 90% in energy savings when replacing metal halide luminaires. With over 100,000 hour life expectancy (12+ years of 24/7 continuous operation), the RCNY LED luminaire provides significant maintenance savings over traditional luminaires. Class 1 Division 2 also available. Wet location junction box available upon request.

Specifications

	RCNY LED
Width:	11.5"
Height:	5.9"
Length:	11.5"
Weight:	14lbs

Ordering Information

EXAMPLE: RCNY LED ALO2 50K 70CRI SYMC MVOLT BZS DWHXD

RCNY LED

Series	Package	Color Temperature	CRI	Lens
RCNY LED	ALO1 2,000-12,000 Lumens; ALO2 4,000-24,000 Lumens	30K 3000K; 40K 4000K; 50K 5000K; 57K 5700K	70CRI; 80CRI; 90CRI[1]	SYMC Symmetric Clear Lens; ASYC Asymmetric Clear Lens; SYMF Symmetric Frost Lens; SYMG Symmetric Glass Lens

Voltage	Trim	Trim Finish	Option
MVOLT 120-277V; HVOLT 347-480V	BZS 11.5" Square Bezel	DWHXD White; DBLXD Black; DDBXD Bronze; DNAXD Natural Aluminum	CCE Coastal Protection; SPD10KV 10K Surge Protection; DMG[2] 0-10V dimming wires pulled outside fixture (for use with an external control, ordered separately)

Accessories
Ordered and shipped separately.

Catalog	Description	Use	Dimensions
FP12RM*	RCNY Backplate for 12" Decks	Covers Existing Hole if Larger than Fixture	11.5" x 24" x 18GA Galv Steel
FP16RM*	RCNY Backplate for 16" Decks	Covers Existing Hole if Larger than Fixture	15.5" x 24" x 18GA Galv Steel
BP18RM*	RCNY 18" Beautyplate	Covers Existing Footprint of Existing Fixture	18" x 18" x 16GA Aluminum
BP26RM*	RCNY 26" Beautyplate	Covers Existing Footprint of Existing Fixture	26" x 26" x 16GA Aluminum
WLJBX2	Waterproof J-Box 1/2 Inch with Cover	For Power Supply Wiring	2.8" x 4.6" x 2.0" Aluminum

* Add "U" to the end of the catalog number for individual unit pack or "J6" for packs of 6 units

NOTES
1. 90CRI not available with 57K.
2. FAO not included with fixture, ALO2 will be set at 24,000 lumens and ALO1 at 12,000 Lumens.

© 2024-2025 Acuity Brands Lighting, Inc. All rights reserved

Line Art

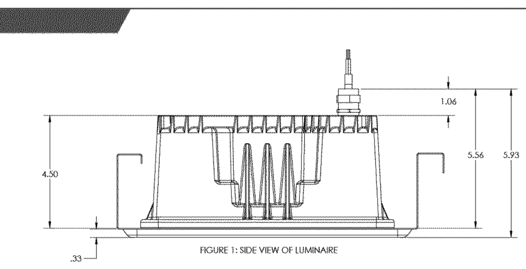

FIGURE 1: SIDE VIEW OF LUMINAIRE

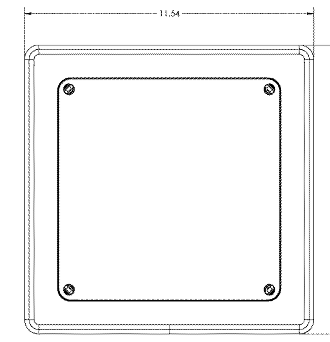

FIGURE 2: BOTTOM SIDE OF CANOPY

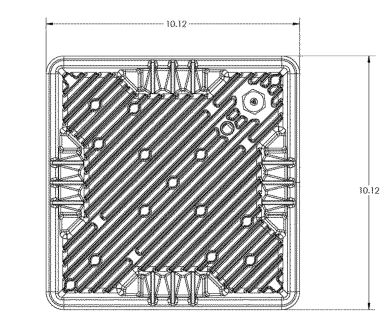

FIGURE 3: TOP SIDE OF CANOPY

FEATURES & SPECIFICATIONS

INTENDED USE
The Velarium RCNY LED recessed luminaire is designed to provide exceptional energy savings and versatility in one fixture. With a compact design the RCNY provides superior illumination while blending into the canopy space seamlessly. The RCNY is unique in that as a recessed canopy it can be installed in both 12" and 16" canopy decks. Features such as Adjustable Lumen Output and forward throw distribution option make the RCNY one of the most versatile gas station canopies in the market. With up to 179 LPW the RCNY LED delivers up to 90% in energy savings when replacing metal halide luminaires. With over 100,000 hour life expectancy (12+ years of 24/7 continuous operation), the RCNY LED luminaire provides significant maintenance savings over traditional luminaires.

CONSTRUCTION
Die-cast aluminum housing for the light engine is optimized for thermal management. Driver is accessible from below without removing fixture for easy maintenance. The light engine housing is completely sealed against moisture and environmental contaminants (IP66) and is suitable for hose-down application.

ELECTRICAL
Light engine consists of high-efficacy LEDs mounted to metal-core circuit boards to maximize heat dissipation and promote long life (up to L77/100,000 hours at 25°C). The electronic driver has a power factor of >90% and THD <20%. Standard 6KV surge protection. Operating temperature -40C to 35C.

INSTALLATION
The product can be installed by one person to a 12" or 16" deck panel. The Adjustable Lumen Output (ALO) module in the driver box allows the contractor to customize the lumens (8 levels) based on application needs. Two trim options provide clean look once installation is complete.

LISTINGS
UL Listed to U.S. and Canadian safety standards for wet locations IP66
Tested in accordance with IESNA LM-79 and LM-80 standards.

WARRANTY
5-year limited warranty. This is the only warranty provided and no other statements in this specification sheet create any warranty of any kind. All other express and implied warranties are disclaimed. Complete warranty terms located at: www.acuitybrands.com/support/warranty/terms-and-conditions

Note: Actual performance may differ as a result of end-user environment and application. All values are design or typical values, measured under laboratory conditions at 25 °C. The product images shown are for illustration purposes only and may not be an exact representation of the product.
Specifications subject to change without notice.

© 2024-2025 Acuity Brands Lighting, Inc. All rights reserved

FIN - MODEL: WP-LED1
Endurance Wallpack

WAC

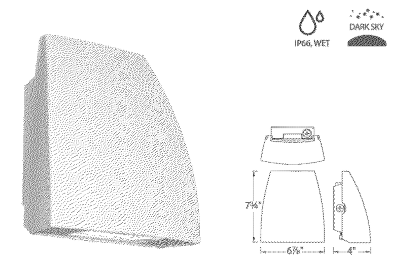

Fixture Type:

Catalog Number:

Project:

Location:

PRODUCT DESCRIPTION
Die cast aluminum factory sealed housings with patent pending design for a water and dust proof IP66 rated outdoor luminaire

FEATURES
- Factory-Sealed LED Light Engine
- 20° Forward Throw Illumination
- Photo/Motion Sensor Compatible (Sold Separately)
- Built-in Level For Easy Adjustment
- Suitable to install in all directions
- Multi-Function Dimming: ELV (120V) or 0-10V
- 85 CRI
- 100,000 hour rated life

SPECIFICATIONS

Construction:	Die-cast aluminum
Power:	Integral driver in luminaire. Universal voltage input (120V-277V)
Dimming:	100% - 30% with 0 - 10V dimmer (120V - 277V) 100% - 15% with Electronic Low Voltage (ELV) dimmer (120V only)
Finish:	Architectural Bronze, Graphite, and White
Standards:	IP66, Wet Location, ETL & cETL Listed
Total Harmonic Distortion:	35%
Operating Temperature	-40°C (-40°F) to 40°C (104°F)

PHOTOMETRY

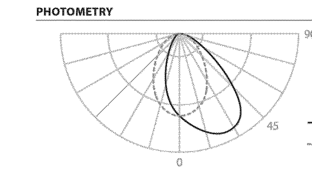

ORDERING NUMBER

	Color Temp	Comparable	Color Temp				Finish
WP-LED119	19W	39W HID	30	3000K	1390	1030	aBZ Architectural Bronze
WP-LED127	27W	70W HID	30	3000K	2075	1461	aGH Architectural Graphite
WP-LED135	35W	100W HID	30	3000K	2750	1930	aWT Architectural White

Example: WP-LED119-30-aBZ

PHOTOMETRY

Motion Sensor (120V)	MS-120-BZ / MS-120-GY / MS-120-WT	Bronze / Gray / White	
Photo Sensor (120V)	PC-120-BZ / PC-120-GY / PC-120-WT	Bronze / Gray / White	

WAC Lighting retains the right to modify the design of our products at any time as part of the company's continuous improvement program. JAN 2025

SSL solid state luminaires

Date: Approved:
Type:
Luminaire:
Project:

COVELINE WET 1.5

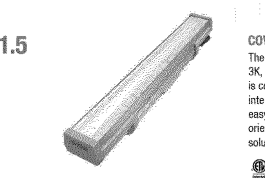

COVELINE WET 1.5 is a powerful and versatile interior / exterior cove luminaire. The COVELINE WET 1.5 comes in a 1 ft, 4 ft or 6 ft nominal lengths and 27K, 3K, 35K, 4K or 5K color temperatures, as well as static color choices. The housing is constructed of extruded aluminum with tooled end caps and is IP66 rated for interior & exterior use. Features IP68 line voltage Plug N' Play connectors for easy installation. Power supply is integral, no remote driver required. Universal orientation luminaire; up, down, horizontal or vertical positioning and 9 optical solutions. Flicker free dimmable to 5% full brightness ELV trailing edge dimming.

SPECIFICATIONS

PHYSICAL	
beam spread	10°, 10° x 40°, 120°, 25°, 30° x 60°, 40°, 80°, 67° x 140°, 21° x 56° asymmetric
LEDs per foot	14
mounting	Standard: surface mount bracket with (+/- 45° from center), optional: ADBW2-90 full 180° rotation (+/- 90° from center)
housing	eExtruded aluminum housing with moulded end caps
lens	Clear, tempered glass with a frosted edge
ingress protection	IP66 rated for wet, exterior location (Connectors IP68)
luminaire connections	Twist-lock IP68 rated, CCC
vibration resistance	Compliant with 3G ANSI C136.31
dimensions	12.25" x 1.77" x 1.9", 47" x 1.77" x 1.9", 70.25" x 1.77" x 1.9"
weight	1.3 lbs

PERFORMANCE	
color temperature	2700K, 3000K, 3500K, 4000K, 5000K
lumen output	865 lm/ft, 893 lm/ft, 925 lm/ft, 950 lm/ft, 1000 lm/ft
lumen maintenance	L70 > 70,000 hours
color consistency	3 SDCM, standard: 80 CRI, optional: 90 CRI
operating temperature	-40°F to 104°F (-40°C to 40°C)
warranty	5-Year limited warranty

ELECTRICAL	
input voltage	Universal 120 - 277 VAC
power supply	integral Class II, electronic high-power factor > 94% @120V
dimming	ELV (reverse phase/trailing edge) ≤ 5%
certification	ETL / cETL listed
standards	UL1598/CSA C22.2 No. 250.0, IESLM-79/LM-80, FCC Part 15
power consumption	9W/ft @ 120V

Due to continuous development and improvements, specifications are subject to change without notice. Product use certifies agreement to Solid State Luminaires terms and conditions.

Ordering Information — COVELINE WET 1.5

PART NUMBER

MODEL	LENGTH	CCT		CRI	OPTICS	OPTIONS
CVLWET1.5 COVELINE WET 1.5	1 12 in. (305 mm); 4 46.8 in. (1189 mm); 6 70 in. (1778 mm)	WHITE LIGHT: 27K 2700K; 3K 3000K; 35K 3500K; 4K 4000K; 5K 5000K	MONO COLOR: AMB Amber; BLU Blue; LTBLU Light Blue; RED Red	CRI80 80 CRI; CRI90 90 CRI	10 10° beam; 1040 10°x 40° beam; 120 120° beam; 25 25° beam; 3060 30°x60° beam; 40 40° beam; 80 80° beam; 67140 67°x140°; ASY 21°x56° asymmetric	WCL-1 Louvre (Black) - 1 ft.; WCL-4 Louvre (Black) - 4 ft.; WCL-6 Louvre (Black) - 6 ft.; WCHS-1 Louvre w/House Shield (Black) - 1 ft.; WCHS-4 Louvre w/House Shield (Black) - 4 ft.; WCHS-6 Louvre w/House Shield (Black) - 6 ft.

Accessories (Indicate the quantity needed for each item.) REQUIRED: Starter Cable (SC10W) and Terminator Cap (TCAPW) for every run. Maximum Run Length = 60 feet (120V)

_____ SC10W 10 ft. Starter Connection Cord
_____ TCAPW Terminator Cap
_____ EC12W 12 in. Extension Cord
_____ EC24W 24 in. Extension Cord
_____ EC60W 60 in. Extension Cord

Mounting Options (ADBW2 Included With Luminaire) (requirements vary for each luminaire ordered - see mounting pages for details)

_____ ADBW2-90 90° Adjustable Bracket (Bi-directional)
_____ CA2-6 Cantilever Arm - 6"
_____ CA2-12 Cantilever Arm - 12"
_____ CA2-18 Cantilever Arm - 18"
_____ LS-6 Landscape Spike - 6"
_____ HLS Heavy Duty Landscape Spike

Use Module Only to Convert 0-10V Signal to ELV Dimming

DIM0-10VELV is a dimming module that converts a 0-10V dimming signal to an ELV (electronic low-voltage) reverse phase dimming signal for ELV dimmable lighting products.

Control Components (Indicate the quantity needed for each item.) (1 module per run) (Indoor rated)

REQUIRED: Starter Cable (SC6) and Terminator Cap (TCAP) for every run.
_____ DIM0-10VELV-UNV-OJBM-IJBM-BLA 0-10V ELV Dim Module, Output Junction Box Mount (12" lead wire), Input Junction Box Mount (12" lead wire), Interior Rated Enclosure, Black Anodized Alum.
_____ DIM0-10VELV-UNV-OCPM-ICPM-BLA 0-10V ELV Dim Module, Output Conduit Pipe Mount (96" lead wire), Input Conduit Pipe Mount (96" lead wire), Interior Rated Enclosure, Black Anodized Alum.

Due to continuous development and improvements, specifications are subject to change without notice. Product use certifies agreement to Solid State Luminaires terms and conditions.

Ordering Information (DSX0)

Accessories
Ordered and shipped separately.

DLL127F 1.5 JU	Photocell - SSL twist-lock (120-277V)
DLL347F 1.5 CUL JU	Photocell - SSL twist-lock (347V)
DLL480F 1.5 CUL JU	Photocell - SSL twist-lock (480V)
DSHORT SBK	Shorting cap
DSX0HS P#	House-side shield (enter package number P1-7, P10-13 in place of #)
DSXRPA (FINISH)	Round pole adapter (#8 drilling, specify finish)
DSXRPA5 (FINISH)	Round pole adapter #5 drilling (specify finish)
DSXSPA5 (FINISH)	Square pole adapter #5 drilling (specify finish)
DSX0EGSR (FINISH)	External glare shield (specify finish)
DSX0BSDB (FINISH)	Bird spike deterrent bracket (specify finish)

NOTES
1 Rotated optics available with packages P10, P11, P12 and P13. Must be combined with option L90 or R90.
2 30K, 40K, and 50K available in 70CRI and 80CRI. 27K and 35K only available with 80CRI. Contact Technical Support for other possible combinations.
3 T3LG, T4LG, BLC3, BLC4, LCCO, RCCO not available with option HS.
4 MVOLT driver operates on any line voltage from 120-277V (50/60 Hz).
5 HVOLT driver operates on any line voltage from 347-480V (50/60 Hz).
6 HVOLT not available with package P1, P2 and P10 when combined with option NLTAIR2 PIRHN or option PIR.
7 XVOLT operates with any voltage between 277V and 480V (50/60 Hz).
8 XVOLT not available in packages P1, P2 or P10. XVOLT not available with fusing (SF or DF).
9 SPA5 and RPA5 for use with #5 drilling only (Not for use with #8 drilling).
10 WBA cannot be combined with Type 5 distributions plus photocell (PER).
11 NLTAIR2 and PIRHN must be ordered together. For more information on nLight Air 2.
12 NLTAIR2 PIRHN not available with other controls including PIR, PER, PER5, PER7, FAO, BL30, BL50 and DMG. NLTAIR2 PIRHN not available with P1, P2 and P10 using HVOLT. NLTAIR2 PIRHN not available with P1, P2 and P10 using XVOLT. NLTAIR2 PIRHN not available with P1 using MVOLT.
13 PIR not available with NLTAIR2, PER, PER5, PER7, FAO BL30, BL50 and DMG. PIR not available with P1, P2 and P10 using HVOLT. PIR not available with P1, P2 and P10 using XVOLT. PIR not available with P1 using MVOLT.
14 PER/PER5/PER7 not available with NLTAIR2, PIR, BL30, BL50. Photocell ordered and shipped as a separate line item from Acuity Brands Controls. See accessories. Shorting Cap included.
15 FAO not available with other dimming control options NLTAIR2 PIRHN, PIR, PER5, PER7, BL30, BL50, or DMG.
16 BL30 and BL50 are not available with NLTAIR2 PIRHN, PIR, PER, PER5, PER7, FAO and DMG. BL30 or BL50 must specify 120 or 277V.
17 DMG not available with NLTAIR2 PIRHN, PIR, PER, PER5, PER7, BL30, BL50 and FAO.
18 Reference Motion Sensor Default Settings table on page 4 to see functionality.
19 Reference Controls Options table on page 4.
20 Option HS not available with T3LG, T4LG, BLC3, BLC4, LCCO and RCCO distribution. Also available as a separate accessory; see Accessories information.
21 CCE option not available with option BS and EGSR. Contact Technical Support for availability.
22 Option HA not available with performance packages P6, P7, P12 and P13.
23 Requires luminaire to be specified with PER, PER5 or PER7 option. See Controls Table on page 4.
24 Single fuse (SF) requires 120V, 277V, or 347V. Double fuse (DF) requires 208V, 240V or 480V. XVOLT not available with fusing (SF or DF).

Shield Accessories

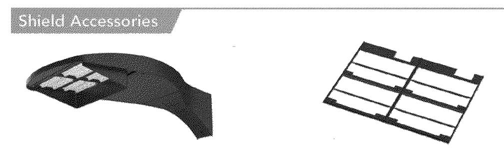

External Glare Shield (EGSR) House Side Shield (HS)

Drilling

HANDHOLE ORIENTATION
(from top of pole)

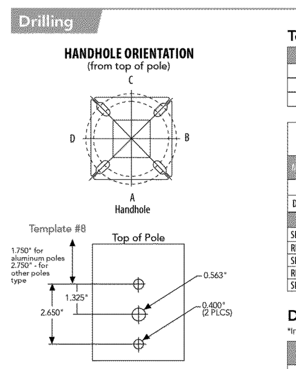

Tenon Mounting Slipfitter

Tenon O.D.	Mounting	Single Unit	2 @ 180	2 @ 90	3 @ 90	3 @ 120	4 @ 90
2-3/8"	RPA	AS3-5 190	AS3-5 280	AS3-5 290	AS3-5 390	AS3-5 320	AS3-5 490
2-7/8"	RPA	AST25-190	AST25-280	AST25-290	AST25-390	AST25-320	AST25-490
4"	RPA	AST35-190	AST35-280	AST35-290	AST35-390	AST35-320	AST35-490

Mounting Option	Drilling Template	Single	2 @ 180	2 @ 90	3 @ 90	3 @ 120	4 @ 90
Head Location		Side B	Side B & D	Side B & C	Side B, C & D	Round Pole Only	Side A, B, C & D
Drill Nomenclature	#8	DM19AS	DM28AS	DM29AS	DM39AS	DM32AS	DM49AS
Minimum Acceptable Outside Pole Dimension							
SPA	#8	3.5"	3.5"	3.5"	3.5"		3.5"
RPA	#8	3"	3"	3"	3"	3"	3"
SPA5	#5	3"	3"	3"	3"		3"
RPA5	#5	3"	3"	3"	3"	3"	3"
SPA8N	#8	3"	3"	3"	3"		3"

DSX0 Area Luminaire - EPA

*Includes luminaire and integral mounting arm. Other tenons, arms, brackets or other accessories are not included in this EPA data.

Fixture Quantity & Mounting Configuration	Single DM19	2 @ 180 DM28	2 @ 90 DM29	3 @ 90 DM39	3 @ 120 DM32	4 @ 90 DM49
DSX0 with SPA	0.44	0.88	0.96	1.18	---	1.16
DSX0 with SPA5, SPA8N	0.51	1.02	1.06	1.26	---	1.29
DSX0 with RPA, RPA5	0.51	1.02	1.06	1.26	1.24	1.29
DSX0 with MA	0.64	1.28	1.24	1.67	1.70	1.93

© 2011-2025 Acuity Brands Lighting, Inc. All rights reserved.

Photometric Diagrams

Full photometric data report available within 2 weeks from request. Contact Acuity Tech Support.

SYMMETRIC CLEAR LENS / ASYMMETRIC CLEAR LENS

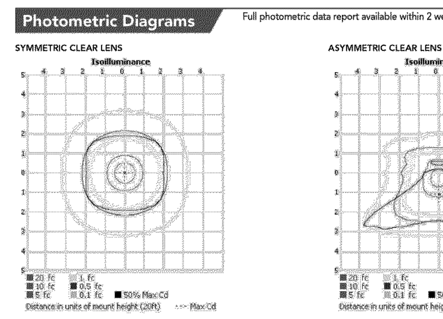

Performance Data

Symmetric Clear Lens

Performance Package	Setting	System Watts	30K (3000K, 70 CRI) Lumens	LPW	40K (4000K, 70 CRI) Lumens	LPW	50K (5000K, 70 CRI) Lumens	LPW	50K (5000K, 90 CRI) Lumens	LPW
ALO2	1	24	3,681	153	3,795	158	3,843	160	3,436	143
ALO2	2	42	6,933	165	7,149	170	7,238	172	6,473	154
ALO2	3	57	9,677	170	9,978	175	10,103	177	9,035	159
ALO2	4	74	12,606	170	12,998	176	13,162	178	11,770	159
ALO2	5	89	15,249	171	15,723	177	15,920	179	14,237	160
ALO2	6	107	18,182	170	18,747	175	18,983	177	16,975	159
ALO2	7	123	20,446	166	21,082	171	21,347	174	19,089	155
ALO2	8	132	22,143	168	22,831	173	23,118	175	20,003	152
ALO1	1	14	1,956	140	2,017	144	2,042	146	1,842	132
ALO1	2	24	3,684	154	3,799	158	3,846	160	3,470	145
ALO1	3	32	5,142	161	5,302	166	5,369	168	4,844	151
ALO1	4	40	6,699	167	6,907	173	6,994	175	6,310	158
ALO1	5	48	8,103	169	8,355	174	8,460	176	7,632	159
ALO1	6	57	9,662	170	9,962	175	10,087	177	9,101	160
ALO1	7	66	10,865	165	11,203	170	11,343	172	10,234	155
ALO1	8	72	11,767	163	12,132	169	12,285	171	11,083	154

Symmetric Frost Lens

Performance Package	Setting	System Watts	30K (3000K, 70 CRI) Lumens	LPW	40K (4000K, 70 CRI) Lumens	LPW	50K (5000K, 70 CRI) Lumens	LPW	50K (5000K, 90 CRI) Lumens	LPW
ALO2	1	24	3,283	137	3,385	141	3,427	143	3,065	128
ALO2	2	42	6,184	147	6,376	152	6,456	154	5,774	137
ALO2	3	57	8,632	151	8,900	156	9,012	158	8,059	141
ALO2	4	74	11,244	152	11,594	157	11,740	159	10,498	142
ALO2	5	89	13,601	153	14,024	158	14,200	160	12,699	143
ALO2	6	107	16,217	152	16,721	156	16,932	158	15,141	142
ALO2	7	123	18,237	148	18,804	153	19,040	155	17,027	138
ALO2	8	132	19,750	150	20,364	154	20,620	156	18,440	140
ALO1	1	14	1,745	125	1,799	129	1,821	130	1,643	117
ALO1	2	24	3,286	137	3,388	141	3,431	143	3,095	129
ALO1	3	32	4,587	143	4,729	148	4,789	150	4,320	135
ALO1	4	40	5,975	149	6,161	154	6,238	156	5,628	141
ALO1	5	48	7,227	151	7,452	155	7,546	157	6,808	142
ALO1	6	57	8,618	151	8,886	156	8,997	158	8,117	142
ALO1	7	66	9,691	147	9,992	151	10,118	153	9,128	138
ALO1	8	72	10,495	146	10,821	150	10,957	152	9,886	137

Asymmetric Clear Lens

Performance Package	Setting	System Watts	30K (3000K, 70 CRI) Lumens	LPW	40K (4000K, 70 CRI) Lumens	LPW	50K (5000K, 70 CRI) Lumens	LPW	50K (5000K, 90 CRI) Lumens	LPW
ALO2	1	26	3,193	123	3,411	131	3,549	137	2,378	91
ALO2	2	45	5,628	125	6,012	134	6,096	135	4,192	93
ALO2	3	61	7,957	130	8,500	139	8,618	141	5,927	97
ALO2	4	79	10,142	128	10,834	137	10,984	139	7,554	96
ALO2	5	96	12,281	128	13,119	137	13,301	139	9,147	95
ALO2	6	114	14,093	124	15,055	132	15,264	134	10,497	92
ALO2	7	132	15,860	120	16,943	128	17,178	130	11,813	89
ALO2	8	141	16,293	116	18,078	128	18,329	130	12,605	89
ALO1	1	14	1,587	113	1,696	121	1,719	123	1,182	84
ALO1	2	25	2,798	112	2,989	120	3,030	121	2,084	83
ALO1	3	31	3,877	125	4,142	134	4,199	135	2,888	93
ALO1	4	39	5,041	129	5,385	138	5,460	140	3,755	96
ALO1	5	47	6,105	130	6,521	139	6,612	141	4,547	97
ALO1	6	53	7,005	132	7,483	141	7,587	143	5,218	98
ALO1	7	60	7,884	131	8,422	140	8,539	142	5,872	98
ALO1	8	66	8,412	127	8,986	136	9,111	138	6,266	95

Symmetric Glass Lens

Performance Package	Setting	System Watts	30K (3000K, 70 CRI) Lumens	LPW	40K (4000K, 70 CRI) Lumens	LPW	50K (5000K, 70 CRI) Lumens	LPW	50K (5000K, 90 CRI) Lumens	LPW
ALO2	1	24	3,511	146	3,620	151	3,666	153	3,278	137
ALO2	2	42	6,614	157	6,819	162	6,905	164	6,175	147
ALO2	3	57	9,231	162	9,518	167	9,638	169	8,619	151
ALO2	4	74	12,025	163	12,399	168	12,555	170	11,227	152
ALO2	5	89	14,546	163	14,998	169	15,186	171	13,581	153
ALO2	6	107	17,344	162	17,883	167	18,108	169	16,193	151
ALO2	7	123	19,504	159	20,110	163	20,363	166	18,209	148
ALO2	8	132	21,122	160	21,779	165	22,052	167	19,721	149
ALO1	1	14	1,866	133	1,924	137	1,948	139	1,757	126
ALO1	2	24	3,514	146	3,624	151	3,669	153	3,310	138
ALO1	3	32	4,905	153	5,058	158	5,121	160	4,620	144
ALO1	4	40	6,390	160	6,589	165	6,672	167	6,019	150
ALO1	5	48	7,729	161	7,970	166	8,070	168	7,281	152
ALO1	6	57	9,216	162	9,503	167	9,622	169	8,681	152
ALO1	7	66	10,364	157	10,686	162	10,820	164	9,762	148
ALO1	8	72	11,224	156	11,573	161	11,718	163	10,572	147

RCNY LED ALO2 50K

	B	U	G
SYMC	4	0	2
SYMF	4	0	2
ASYC	3	0	2

© 2024-2025 Acuity Brands Lighting, Inc. All rights reserved

2017\17001949B\Engineering\Site Plans\Phase 3\C-LGHT-PHASE3.dwg\C-9.01-LIGHTING DETAILS By: PCRICHLOW

Colliers Engineering & Design

www.colliersengineering.com

Copyright © 2025. Colliers Engineering & Design All Rights Reserved. This drawing and all the information contained herein is authorized for use only by the party for whom the services were contracted or to whom it is certified. This drawing may not be copied, reused, disclosed, distributed or relied upon for any other purpose without the express written consent of Colliers Engineering & Design.

Doing Business as MASER CONSULTING

811 Know what's below. Call before you dig.

PROTECT YOURSELF
ALL STATES REQUIRE NOTIFICATION OF EXCAVATORS, DESIGNERS, OR ANY PERSON PREPARING TO DISTURB THE EARTH'S SURFACE ANYWHERE IN ANY STATE

FOR STATE SPECIFIC DIRECT PHONE NUMBERS VISIT: WWW.CALL811.COM

REV	DATE	DRAWN BY	DESCRIPTION
1	7/1/25	MB	REVISED FOR TOWNSHIP SUBMISSION.

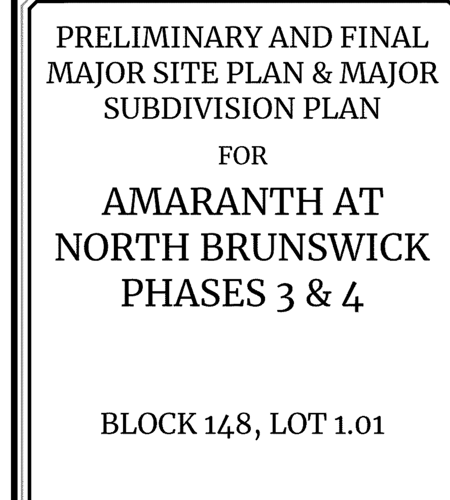

Christopher R. Gammons
NEW JERSEY LICENSED LANDSCAPE ARCHITECT
LICENSE NUMBER: AS01132
COLLIERS ENGINEERING & DESIGN, INC.
N.J. C.O.A. #: 24GA27986500

PRELIMINARY AND FINAL MAJOR SITE PLAN & MAJOR SUBDIVISION PLAN

FOR

AMARANTH AT NORTH BRUNSWICK PHASES 3 & 4

BLOCK 148, LOT 1.01

TOWNSHIP OF NORTH BRUNSWICK
MIDDLESEX COUNTY
NEW JERSEY

Colliers Engineering & Design

HOLMDEL (Headquarters)
101 Crawfords Corner Road, Suite 3400
Holmdel, NJ 07733
Phone: 732.383.1950
COLLIERS ENGINEERING & DESIGN, INC. DOING BUSINESS AS MASER CONSULTING

SCALE:	DATE:	DRAWN BY:	CHECKED BY:
AS SHOWN	6/13/2025	RL	CG

PROJECT NUMBER:	DRAWING NAME:
17001949B	C-LGHT-PHASE3

SHEET TITLE:
LIGHTING DETAILS

SHEET NUMBER:
9.01

NOTE: DO NOT SCALE DRAWINGS FOR CONSTRUCTION.

LIGHTING FIXTURE 'W3'

SYMBOL	LABEL	QTY	MODEL #
	W3	2	DSXW1 P2 50K T3M HS

LIGHTING FIXTURE 'Z1'

SYMBOL	LABEL	QTY	MODEL #
	Z1	13	RT403CA-26L40T3R-MDL05

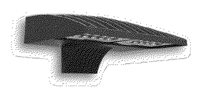

d"series

D-Series Size 1
LED Wall Luminaire

BAA BABA

Catalog Number

Notes

Type

Hit the Tab key or mouse over the page to see all interactive elements.

Specifications
Luminaire

Width: 13-3/4" (34.9 cm) Weight: 12 lbs (5.4 kg)
Depth: 10" (25.4 cm)
Height: 6-3/8" (16.2 cm)

Back Box (BBW, E20WC)

Width: 13-3/4" (34.9 cm) BBW Weight: 5 lbs (2.3 kg)
Depth: 4" (10.2 cm) E20WC Weight: 10 lbs (4.5 kg)
Height: 6-3/8" (16.2 cm)

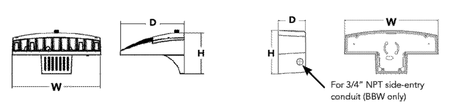

Introduction
The D-Series Wall luminaire is a stylish, fully integrated LED solution for building-mount applications. It features a sleek, modern design and is carefully engineered to provide long-lasting, energy-efficient lighting with a variety of optical and control options for customized performance.

With an expected service life of over 20 years of nighttime use and significant energy savings, the D-Series Wall is a reliable, low-maintenance lighting solution that produces sites that are exceptionally illuminated.

Ordering Information
EXAMPLE: DSXW1 LED P2 40K 70CRI T3M MVOLT SRM DDBTXD

DSXW1 LED

Series	Lumen Package	CCT	CRI	Distribution	Voltage	Mounting	Control Options
DSXW1 LED	P1 2000 Lumens P2 2200 Lumens P3 3200 Lumens P4 4300 Lumens P5 5200 Lumens P6 7200 Lumens P7 10000 Lumens	27K 2700K 30K 3000K 35K 3500K 40K 4000K 50K 5000K 57K 5700K AMBPC Amber PC[3] AMBLW Amber LW[1,3]	70CRI 70CRI 80CRI 80CRI[2] AMCRI Amber CRI	T2S Type 2 Short T2M Type 2 Medium T3LG Type 3 Low Glare[4] T3M Type 3 Medium T4M Type 4 Medium TFTM Forward Throw Medium BLC3 Back Light Control Type 3[4] BLC4 Back Light Control Type 4[4]	MVOLT 120[5] 208[5] 240[5] 277[5] 347[5,6] 480[5,6] HVOLT[6]	Shipped included SRM Surface mounting bracket BBW Surface-mounted back box (for conduit entry)[7]	Shipped installed PE Photoelectric cell, button type[8] DMG 0-10v dimming wires pulled outside fixture (for use with an external control, ordered separately) PIR 180° motion/ambient light sensor, <15' mtg ht[9] PIRH 180° motion/ambient light sensor, 15-30' mtg ht[9] PIR1FC3V Motion/ambient sensor, 8-15' mounting height, ambient sensor enabled at 1fc[9] PIRH1FC3V Motion/ambient sensor, 15-30' mounting height, ambient sensor enabled at 1fc[9] E20WC 20 Watt Emergency battery backup (includes external component enclosure), CA Title 20 Compliant[10] E10WH 10 Watt Emergency battery backup (includes external component enclosure), CA Title 20 compliant[10]

Other Options		Finish (required)		
Shipped installed SF Single fuse (120, 277 or 347V)[5,11] DF Double fuse (208, 240 or 480V)[5,11] HS House-side shield[12] SPD Separate surge protection	Shipped separately[12] BSW Bird-deterrent spikes VG Vandal guard DDL Diffused drop lens	DDBXD Dark bronze DBLXD Black DNAXD Natural aluminum DWHXD White	DSSXD Sandstone DDBTXD Textured dark bronze DBLBXD Textured black DNATXD Textured natural aluminum	DWHGXD Textured white DSSTXD Textured sandstone

Accessories
Ordered and shipped separately.

DSXWHS U	House-side shield (one per light engine)
DSXWBSW U	Bird-deterrent spikes
DSXW1VG U	Vandal guard accessory

NOTES
1 Only available with P1 and P6 Packages.
2 Not available with 57K.
3 Only Available with AMCRI.
4 Not available with HS Option.
5 Single fuse (SF) requires 120, 277 or 347 voltage option. Double fuse (DF) requires 208, 240 or 480 voltage option.
6 Not available with P1 package. Not available with motion/ambient light sensors (PIR or PIRH). Not Available with DMG.
7 Back box ships installed on fixture. Cannot be field installed. Cannot be ordered as an accessory. Not Available with E20WC or E10WH.
8 Photocontrol (PE) requires 120, 208, 240, 277 or 347 voltage option. Not available with motion/ambient light sensors (PIR or PIRH).
9 Reference Motion Sensor table on page 3. Not available with DMG.
10 Not compatible with conduit entry applications. Not available with BBW mounting option. Not available with SF and DF fusing. Not available with 347, 480, HVOLT voltage options. Emergency components located in back box housing. Not available with SPD.
11 Not available with E20WC and E10WH.
12 Also available as a separate accessory; see Accessories information.

© 2013-2024 Acuity Brands Lighting, Inc. All rights reserved.

Performance Data

Lumen Output
Lumen values are from photometric tests performed in accordance with IESNA LM-79-08. Contact factory for performance data on any configurations not shown here.

Package	Dist. Type	System Watts	30K, 70CRI Lumens	30K, 70CRI LPW	40K, 70CRI Lumens	40K, 70CRI LPW	50K, 70CRI Lumens	50K, 70CRI LPW
P1	T2M	12	1,840	149	1,965	159	1,993	161
	T3M	12	1,786	144	1,908	154	1,934	156
	T4M	12	1,821	147	1,946	157	1,973	159
	TFTM	12	1,816	147	1,940	157	1,967	159
	BLC4	12	1,382	112	1,476	119	1,497	121
P2	T2M	15	2,189	150	2,339	160	2,371	163
	T3M	15	2,126	146	2,271	156	2,302	158
	T4M	15	2,168	149	2,316	159	2,348	161
	TFTM	15	2,161	148	2,309	158	2,341	161
	BLC4	15	1,645	113	1,757	121	1,781	122
P3	T2M	21	3,064	146	3,273	155	3,318	158
	T3M	21	2,974	141	3,177	151	3,222	153
	T4M	21	3,033	144	3,240	154	3,285	156
	TFTM	21	3,024	144	3,231	153	3,275	156
	BLC4	21	2,302	109	2,459	117	2,493	118
P4	T2M	29	3,997	139	4,269	149	4,329	151
	T3M	29	3,880	135	4,145	145	4,203	147
	T4M	29	3,957	138	4,227	147	4,286	149
	TFTM	29	3,945	138	4,214	147	4,273	149
	BLC4	29	3,002	105	3,207	112	3,252	113
P5	T2M	37	4,977	134	5,317	143	5,391	145
	T3M	37	4,832	130	5,162	139	5,233	141
	T4M	37	4,928	132	5,264	142	5,337	144
	TFTM	37	4,913	132	5,248	141	5,321	143
	BLC4	37	3,739	101	3,994	107	4,050	109
P6	T2M	48	6,867	142	7,335	152	7,437	154
	T3M	48	6,667	138	7,122	148	7,220	150
	T4M	48	6,798	141	7,262	151	7,363	153
	TFTM	48	6,778	140	7,241	150	7,341	152
	BLC4	48	5,158	107	5,511	114	5,587	116
P7	T2M	73	9,819	135	10,490	145	10,635	147
	T3M	73	9,533	131	10,184	140	10,325	142
	T4M	73	9,722	134	10,385	143	10,529	145
	TFTM	73	9,693	134	10,354	143	10,498	145
	BLC4	73	7,377	102	7,880	109	7,989	110

© 2013-2024 Acuity Brands Lighting, Inc. All rights reserved.

Project		Catalog #		Type	
Prepared by		Notes		Date	

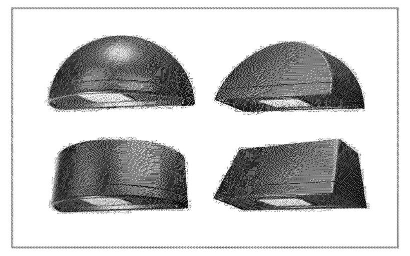

McGraw-Edison
Impact Elite LED

Wall Mount Luminaire

Interactive Menu
- Ordering Information page 2
- Product Specifications page 2
- Energy and Performance Data page 3
- Control Options page 4

Product Certifications

Quick Facts
- 15 Optical Distributions
- Lumen packages range from 2,459 to 11,480 (20W - 95W)
- Efficacy up to 149 lumens per watt

Connected Systems
- WaveLinx PRO Wireless
- WaveLinx LITE Wireless
- Enlighted

Dimensional Details

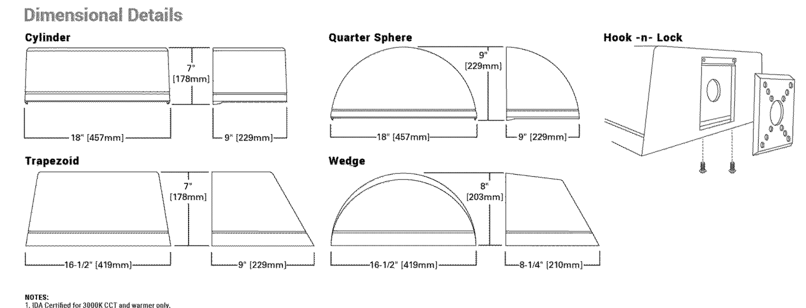

NOTES:
1. IDA Certified for 3000K CCT and warmer only.

McGraw-Edison Impact Elite LED

Ordering Information
SAMPLE NUMBER: **ISC-SA1F-740-U-T3-BZ**

Product Family[1]	Light Engine Configuration	Light Engine Drive Current	Color Temperature	Voltage	Distribution	Finish
ISC=Impact Elite LED Small Cylinder **ISS**=Impact Elite LED Small Quarter Sphere **IST**=Impact Elite LED Small Trapezoid **ISW**=Impact Elite LED Small Wedge **BAA-ISC**=Impact Elite LED Small Cylinder Buy American Act Compliant[23] **TAA-ISC**=Impact Elite LED Small Cylinder Trade Agreements Act Compliant[23] **BAA-ISS**=Impact Elite LED Small Quarter Sphere Buy American Act Compliant[23] **TAA-ISS**=Impact Elite LED Small Quarter Sphere Trade Agreements Act Compliant[23] **BAA-IST**=Impact Elite LED Small Trapezoid Buy American Act Compliant[23] **TAA-IST**=Impact Elite LED Small Trapezoid Trade Agreements Act Compliant[23] **BAA-ISW**=Impact Elite LED Small Wedge Buy American Act Compliant[23] **TAA-ISW**=Impact Elite LED Small Wedge Trade Agreements Act Compliant[23]	**SA1**=1 Square (16 LED) **PA1**=1 Panel (24 LED)[26]	**A**=350mA **B**=450mA **C**=600mA **D**=800mA **E**=1000mA **F**=1200mA[2]	**722**=70CRI, 2200K **727**=70CRI, 2700K **730**=70CRI, 3000K **735**=70CRI, 3500K **740**=70CRI, 4000K **750**=70CRI, 5000K **760**=70CRI, 6000K **827**=80CRI, 2700K **830**=80CRI, 3000K **AMB**=Amber, 590nm[3,4]	**U**=120-277V **1**=120V **2**=208V **3**=240V **4**=277V **8**=480V[5] **9**=347V	**SA1 Optics** **T2**=Type II **T3**=Type III **T4FT**=Type IV Forward Throw **T4W**=Type IV Wide **SL2**=Type II w/Spill Control **SL3**=Type III w/Spill Control **SL4**=Type IV w/Spill Control **SLL**=90° Spill Light Eliminator Left **SLR**=90° Spill Light Eliminator Right **RW**=Rectangular Wide Type I **PA1 Optics** **5WQ**=Type V Square Wide **T2R**=Type II **T2U**=Type II Urban **T3**=Type III **T4W**=Type IV Wide	**AP**=Grey **BZ**=Bronze **BK**=Black **DP**=Dark Platinum **GM**=Graphite Metallic **WH**=White **RALXX**=Custom Color[27]

Options (Add as Suffix)	Controls and Systems Options (Add as Suffix)	Accessories (Order Separately)[24]
X=Driver Surge Protection (6kV) Only[17] **20K**=Series 20kV UL 1449 Surge Protective Device **CBP**=Battery Pack with Back Box, Cold Weather Rated[14,15] **CBP-CEC**=Battery Pack with Back Box, Cold Weather Rated, CEC compliant[14] **HSS**=Factory Installed House Side Shield[16] **ULG**=Uplight Glow[6,7,25] **LCF**=Light Square Trim Plate Painted to Match Housing[28] **TR**=Tamper Resistant Hardware **CC**=Coastal Construction[21] **HA**=50°C High Ambient[8] **AHD145**=After Hours Dim, 5 Hours, 50%[9] **AHD245**=After Hours Dim, 6 Hours, 50%[9] **AHD255**=After Hours Dim, 7 Hours, 50%[9] **AHD355**=After Hours Dim, 8 Hours, 50%[9]	**BPC**=Button Type Photocontrol (120, 208, 240 or 277V. Must Specify Voltage) **PR7**=NEMA 7-PIN Twistlock Photocontrol Receptacle[2,6,7] **SPB1**=Dimming Occupancy Sensor with Bluetooth Interface, <8' Mounting[12,22] **SPB2**=Dimming Occupancy Sensor with Bluetooth Interface, 8'-20' Mounting[12,22] **SPB4**=Dimming Occupancy Sensor with Bluetooth Interface, 21'-40' Mounting[12,22] **MS/DIM-LXX**=Motion Sensor for Dimming Operation[7,10,11,12] **LWR-LW**=Enlighted Wireless Sensor, Wide Lens for 8'-16' Mounting Height[6,12,13] **LWR-LN**=Enlighted Wireless Sensor, Narrow Lens for 16'-40' Mounting Height[6,12,13] **WLS2XX**=WaveLinx LITE, SR Driver, Dimming Motion and Daylight, Bluetooth Programmable, 7' - 15' Mounting[7,18,20] **WLS4XX**=WaveLinx LITE, SR Driver, Dimming Motion and Daylight, Bluetooth Programmable, 15' - 40' Mounting[7,18,20] **WPS2XX**=WaveLinx PRO, SR Driver, Dimming Motion and Daylight, WAC Programmable, 7' - 15' Mounting[7,18,20] **WPS4XX**=WaveLinx PRO, SR Driver, Dimming Motion and Daylight, WAC Programmable, 15' - 40' Mounting[7,18,20]	**MA1253**=10kV Circuit Module Replacement **MA1254-XX**=Thruway Back Box - Impact Elite Trapezoid **MA1255-XX**=Thruway Back Box - Impact Elite Cylinder **MA1256-XX**=Thruway Back Box - Impact Elite Quarter Sphere **MA1257-XX**=Thruway Back Box - Impact Elite Wedge **FSIR-100**=Wireless Configuration Tool for Occupancy Sensor **WOLC-7P-10A**=WaveLinx Outdoor Control Module (7-pin)[7,19]

NOTES:
1. DesignLight Consortium® Qualified. Refer to www.designlights.org, Qualified Products List under Family Models for details.
2. Not available with ULG option.
3. Choose Drive Current "A" for Amber 590nm, which is provided at 500mA only.
4. Narrow-band 590nm +/- 5nm for wildlife and observatory use. Exact luminaire wattage available in IES files. Available with 5WQ, 5MQ, SL2, SL3 and SL4 distributions. Can be used with HSS option.
5. 480V not to be used with ungrounded or impedance grounded systems.
6. Not available with ISS or ISW.
7. Cannot be used in conjunction with other control options.
8. Suitable for 50°C provided no options other than motion sensor are included and driver output set to 1000mA or less.
9. Requires the use of photocontrol. Not available with 350mA drive current. See After Hours Dim supplemental guide for additional information.
10. Replace LXX with L08 (<8' mounting), L20 (8'-20' mounting) or L40W (21'-40' mounting.)
11. The FSIR-100 configuration tool is required to adjust parameters including high and low modes, sensitivity, time delay, cutoff and more. Consult your lighting representative at Cooper Lighting Solutions for more information.
12. Includes integral photocell.
13. Enlighted wireless sensors are factory installed and require network components in appropriate quantities.
14. Battery pack operating temperature of -20C to +40C. Operates downlight for 90-minutes.
15. Must specify 120V or 277V.
16. Not for use with 5NQ, 5MQ, 5WQ or RW optics. A black trim plate is used when HSS is selected.
17. Removes additional surge module.
18. Replace XX with sensor color (WH, BZ, or BK).
19. Requires PR7.
20. For WaveLinx applications, WAC Gateway required to enable field-configurability: Order WAC-PoE and WPOE-120 (10V to PoE injector) power supply if needed. Gateway not required for WaveLinx Lite Commercial (LC) applications.
21. Coastal construction finish salt spray tested to over 5,000-hours per ASTM B117, with a scribe rating of 9 per ASTM D1654.
22. Smart device with mobile application required to change system defaults. See controls section for details.
23. Only product configurations with these designated prefixes are built to be compliant with the Buy American Act of 1933 (BAA) or Trade Agreements Act of 1979 (TAA), respectively. Please refer to DOMESTIC PREFERENCES website for more information Components shipped separately may be separately analyzed under domestic preference requirements.
24. For BAA or TAA requirements, Accessories sold separately will be separately analyzed under domestic preference requirements. Consult factory for further information.
25. Only available in 3000K, 4000K or 5000K CCT.
26. Not available with motion sensor controls, including SPB, MS/DIM, LWR or WaveLinx.
27. Specify RAL number for Custom Color. Custom color matching available upon request. Consult your lighting representative at Cooper Lighting Solutions for more information.
28. Not available with PA1 configuration.

Thruway Back Box

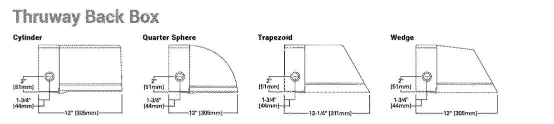

Product Specifications

Construction
- Heavy-wall, die-cast aluminum housing and removable hinged door frame
- Optional tamper-resistant fasteners offer vandal resistant access
- IK10 impact rated

Optics
- High-efficiency injection-molded AccuLED optics technology
- 15 optical distributions
- IDA Certified (3000K CCT and warmer only)

Electrical
- Standard with 0-10V dimming
- Standard with Cooper Lighting Solutions proprietary circuit module designed to withstand 10kV of transient line surge
- Suitable for operation in -40°C to 40°C ambient environments. Optional 50°C high ambient (HA) configuration
- Suitable for operation in -40°C to 40°C ambient environments. Optional 50°C high ambient (HA) configuration.

Mounting
- Utilizes "Hook-N-Lock" mounting mechanism, securing to a gasketed and zinc plated mounting attachment
- Two black oxide coated Allen set screws concealed but accessible from below

Finish
- Super durable TGIC polyester powder coat paint, 2.5 mil nominal thickness
- RAL and custom color matches available
- Coastal Construction (CC) option available

Warranty
- Five year limited warranty, consult website for details. www.cooperlighting.com/legal

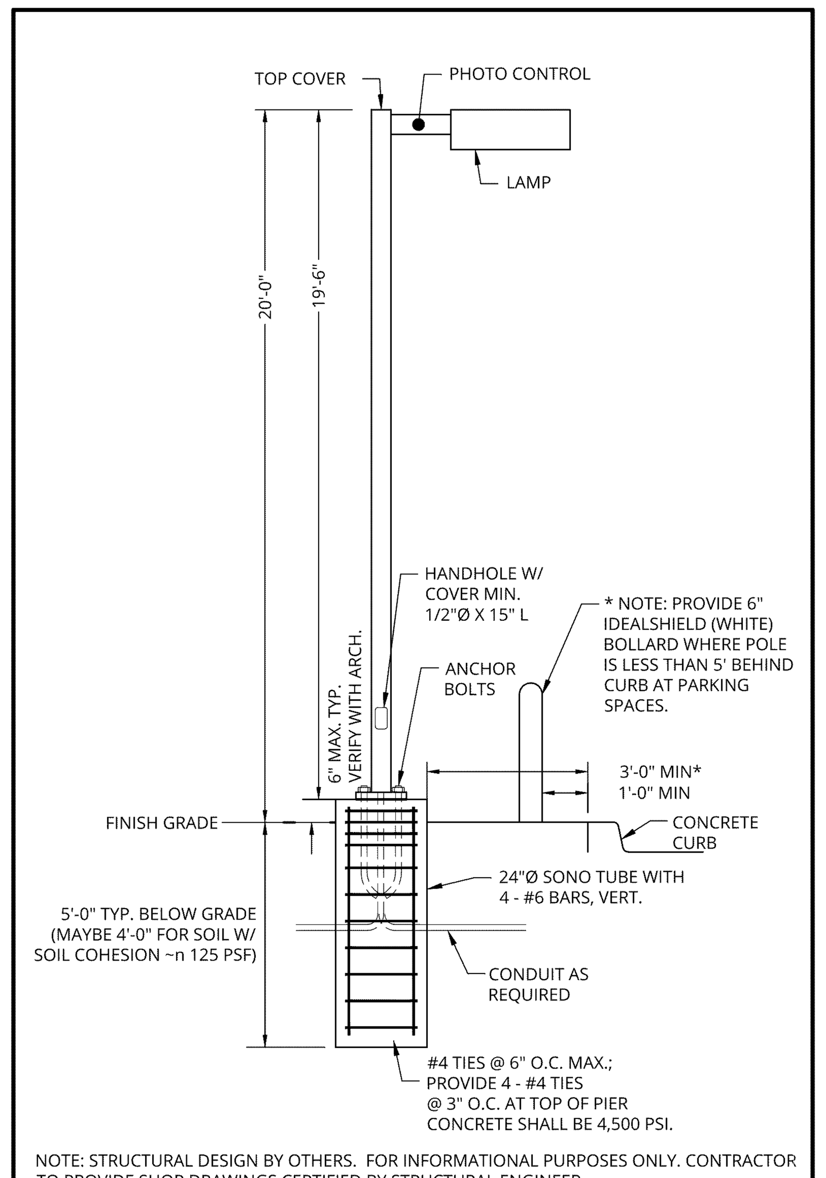

NOTE: STRUCTURAL DESIGN BY OTHERS. FOR INFORMATIONAL PURPOSES ONLY. CONTRACTOR TO PROVIDE SHOP DRAWINGS CERTIFIED BY STRUCTURAL ENGINEER.

LIGHT POLE STANDARD DETAIL

NOT TO SCALE XX/XX/XX

Colliers Engineering & Design
www.colliersengineering.com

Copyright © 2025. Colliers Engineering & Design All Rights Reserved. This drawing and all the information contained herein is authorized for use only by the party for whom the services were contracted or to whom it is certified. This drawing may not be copied, reused, disclosed, distributed or relied upon for any other purpose without the express written consent of Colliers Engineering & Design.

Doing Business as MASER CONSULTING

811 Know what's below. Call before you dig.
PROTECT YOURSELF
ALL STATES REQUIRE NOTIFICATION OF EXCAVATORS, DESIGNERS, OR ANY PERSON PREPARING TO DISTURB THE EARTH'S SURFACE ANYWHERE IN ANY STATE
FOR STATE SPECIFIC DIRECT PHONE NUMBERS VISIT: WWW.CALL811.COM

REV	DATE	DRAWN BY	DESCRIPTION
1	7/1/25	MB	REVISED FOR TOWNSHIP SUBMISSION.

Digitally signed by Chris Gammons Date: 2025.07.02 12:17:00-04'00'

Christopher R. Gammons
NEW JERSEY LICENSED LANDSCAPE ARCHITECT
LICENSE NUMBER: AS01132
COLLIERS ENGINEERING & DESIGN, INC.
N.J. C.O.A. #: 24GA27986500

PRELIMINARY AND FINAL MAJOR SITE PLAN & MAJOR SUBDIVISION PLAN
FOR
AMARANTH AT NORTH BRUNSWICK PHASES 3 & 4

BLOCK 148, LOT 1.01

TOWNSHIP OF NORTH BRUNSWICK
MIDDLESEX COUNTY
NEW JERSEY

Colliers Engineering & Design
HOLMDEL (Headquarters)
101 Crawfords Corner Road, Suite 3400
Holmdel, NJ 07733
Phone: 732.383.1950
COLLIERS ENGINEERING & DESIGN, INC. DOING BUSINESS AS MASER CONSULTING

SCALE:	DATE:	DRAWN BY:	CHECKED BY:
AS SHOWN	6/13/2025	RML	CG
PROJECT NUMBER: 17001949B	DRAWING NAME: C-LGHT-PHASE3		

SHEET TITLE: LIGHTING DETAILS

SHEET NUMBER: 9.02

NOTE: DO NOT SCALE DRAWINGS FOR CONSTRUCTION.

2017\17001949B\Engineering\Site Plans\Phase 3\C-LGHT-PHASE3.dwg\C-9.02-LIGHTING DETAILS By: PCRICHLOW

30" x 30"

COLORS:
LEGEND = WHITE (RETROREFLECTIVE)
BACKGROUND = RED (RETROREFLECTIVE)

R1-1 SIGN DETAIL

NOT TO SCALE | MCCM-SIGN-REGU-R1-1 | 12/01/20

30" x 30"

COLORS:
LEGEND = WHITE (RETROREFLECTIVE)
CIRCLE BACKGROUND = RED (RETROREFLECTIVE)

R5-1 SIGN DETAIL

NOT TO SCALE | MCCM-SIGN-REGU-R5-1 | 12/01/20

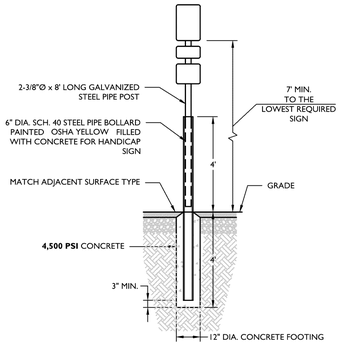

BOLLARD MOUNTED SIGN DETAIL

NOT TO SCALE | MCCM-SIGN-POST-1000 | 07/01/19

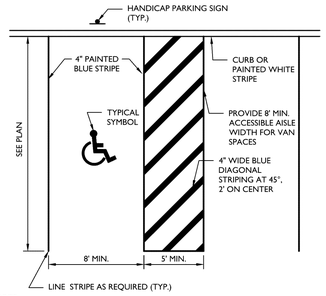

NOTE:
DETAIL IS NOT TO BE USED FOR WAWA. SEE WAWA SPECIFIC DETAIL FOR ACCESSIBLE PARKING LINE STRIPE STALL.

ACCESSIBLE PARKING LINE STRIPE STALL DETAIL

NOT TO SCALE | MCNJ-SITE-MRKG-1801 | 03/01/18

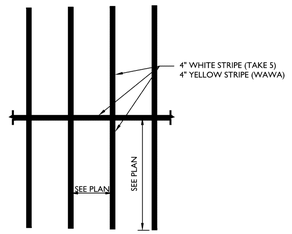

TYPICAL PARKING STALL DETAIL

NOT TO SCALE | MCNJ-SITE-MRKG-1000 | MOD: 06/27/25 05/01/17

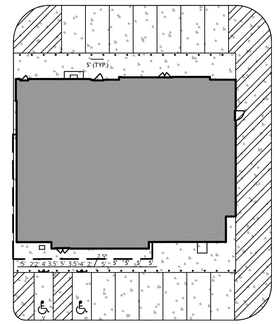

WAWA BOLLARD SPACING DETAIL

NOT TO SCALE | XX/XX/XX

36" x 48"

COLORS:
LEGEND = BLACK
BACKGROUND = WHITE (RETROREFLECTIVE)
YIELD SYMBOL = RED (RETROREFLECTIVE)

R1-5a(L) SIGN DETAIL

NOT TO SCALE | MCCM-SIGN-REGU-R1-5 | 01/01/23

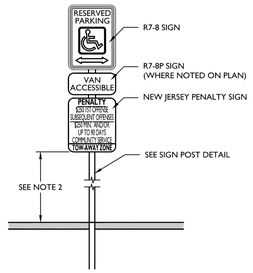

NOTES:

1. INSTALL SIGN WHERE NOTED ON PLAN.
2. THE BOTTOM OF THE LOWEST SIGN SHALL BE MOUNTED 60" ABOVE THE PARKING LOT OR SIDEWALK SURFACE WHEN THE SIGN IS PARALLEL TO THE SIDEWALK AND 72" ABOVE THE PARKING LOT OR SIDEWALK WHEN THE SIGN IS PERPENDICULAR TO THE SIDEWALK.

ACCESSIBLE PARKING SIGN DETAIL

NOT TO SCALE | MCNJ-SITE-HADA-2700 | 07/01/19

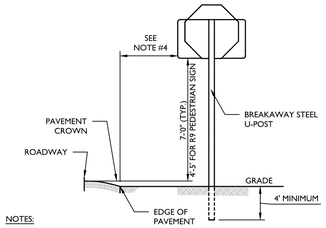

NOTES:

1. ALL POSTS SHALL BE OF ADEQUATE LENGTH TO MEET THE REQUIREMENTS FOR ERECTION, AS STATED IN THE CURRENT MANUAL ON "UNIFORM TRAFFIC CONTROL DEVICES" FOR STREETS AND HIGHWAYS.
2. ALL POSTS SHALL BE EMBEDDED 4' MINIMUM.
3. ALL POSTS TO BE BREAKAWAY STEEL U-POSTS IN CONFORMANCE WITH CURRENT ASTM SPECIFICATION A123 AND STANDARDS.
4. IN AREAS WITHOUT CURBING, THE OUTER EDGE OF SIGN TO BE 2'-0" MINIMUM TO 12'-0" MAXIMUM FROM EDGE OF CURB, AS DIRECTED.

SINGLE POST SIGN MOUNTING DETAIL

NOT TO SCALE | MCCM-SIGN-POST-1100 | 07/01/19

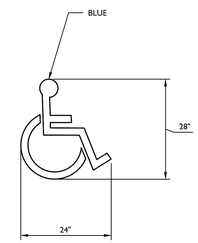

STROKE WIDTH: MINIMUM/STANDARD = 3"

ADA SYMBOL DETAIL

NOT TO SCALE | MCNJ-SITE-MRKG-2000 | 05/01/17

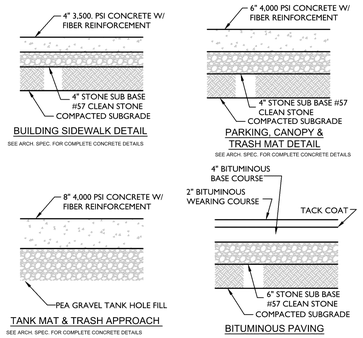

WAWA PAVEMENT DETAIL

NOT TO SCALE | XX/XX/XX

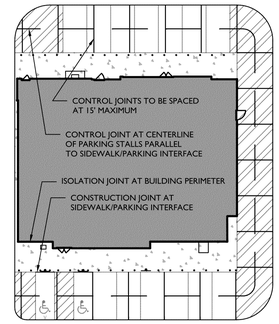

CONTROL JOINT DETAIL

NOT TO SCALE | XX/XX/XX

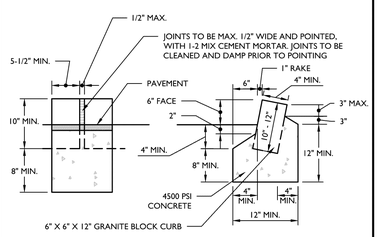

NOTES:

1. ALL CONCRETE MUST BE PROPERLY CURED.
2. CONTRACTOR TO NOTIFY OWNER'S ENGINEER 24 HOURS PRIOR TO POURING.
3. EXPANSION JOINTS THROUGH AND ADJACENT TO THE CURB MUST BE INCLUDED IN THE UNIT PRICE OF THE CURB, WHEN UNIT PRICING IS USED.

GRANITE BLOCK CURB (RSIS) DETAIL

NOT TO SCALE | MCNJ-SITE-CURB-1200 | 11/01/24

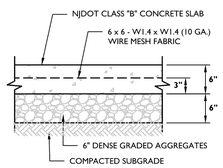

NOTE:
DETAIL IS NOT TO BE USED FOR WAWA. SEE WAWA SPECIFIC DETAIL FOR TRASH ENCLOSURE CONCRETE PAD.

TRASH ENCLOSURE CONCRETE PAD DETAIL

NOT TO SCALE | MCNJ-SITE-PVMT-2100 | 08/01/20

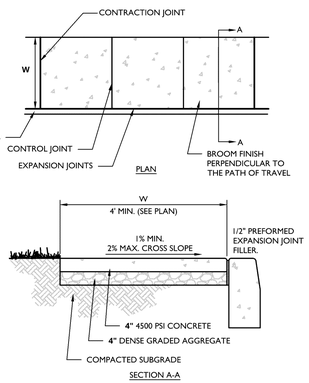

NOTES:

1. EXPANSION JOINT: ½" WIDE FILLER INSTALLED BETWEEN THE CURB AND CONCRETE SIDEWALK. RECESS TO ¼" FROM THE TOP OF SIDEWALK.
2. CONTRACTION JOINTS: ⅛" WIDE FILLER INSTALLED AT AN INTERVAL 24 TO 30 TIMES THE THICKNESS OF THE SLAB (IN FEET), 20' MAX. ON CENTER, TO A DEPTH OF ¼ OF THE THICKNESS OF THE SLAB, RECESS TO ¼" FROM THE TOP OF SIDEWALK. FOR THE FULL WIDTH OF THE SIDEWALK.
3. CONTROL JOINTS: SCORE A ½" WIDE, ¼" DEEP GROOVE ACROSS THE SIDEWALK, EVENLY SPACED BETWEEN THE CONTRACTION JOINTS. SPACING IS TYPICALLY THE WIDTH OF THE SIDEWALK.
4. JOINT FILLER IS TO CONFORM TO AASHTO M-33. SURFACE OF CONCRETE SHALL BE BROOM FINISH. ROUND EDGES USING AN EDGING TOOL WITH A ¼" RADIUS.
5. CONCRETE SIDEWALK MUST BE CONSTRUCTED PER THE LATEST ADA REQUIREMENTS.

CONCRETE SIDEWALK (NEXT TO CURB) DETAIL

NOT TO SCALE | MCNJ-SITE-PVMT-2000 | 09/01/24

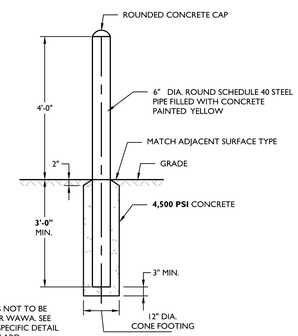

NOTE:
DETAIL IS NOT TO BE USED FOR WAWA. SEE WAWA SPECIFIC DETAIL FOR BOLLARD.

BOLLARD DETAIL

NOT TO SCALE | MCCM-SITE-FNCE-2300 | 07/01/19

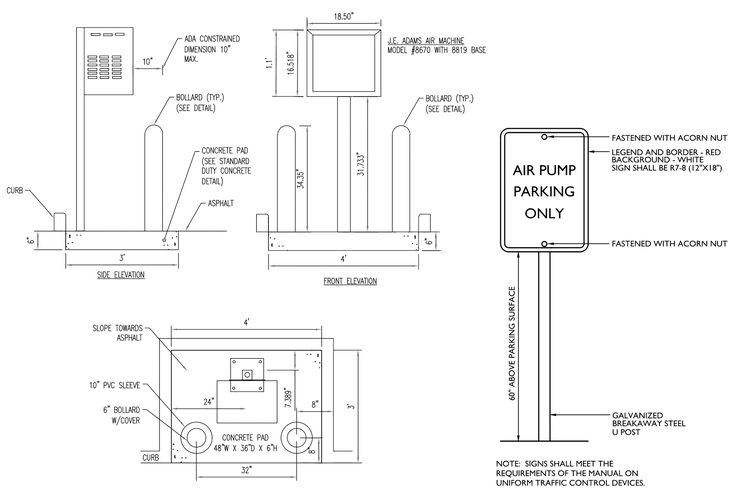

NOTE:
AIR PUMP TO BE J.E. ADAMS AIR MACHINE MODEL #8670)

NOTE: SIGNS SHALL MEET THE REQUIREMENTS OF THE MANUAL ON UNIFORM TRAFFIC CONTROL DEVICES.

WAWA AIR PUMP DETAIL

NOT TO SCALE | XX/XX/XX

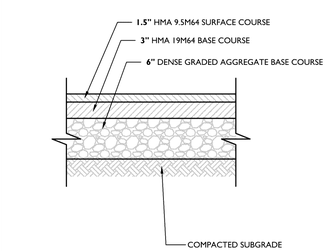

NOTES:

1. CONTRACTOR TO VERIFY PAVEMENT THICKNESS WITH GEOTECHNICAL REPORT.

STANDARD ASPHALT PAVEMENT

NOT TO SCALE | MCNJ-SITE-PVMT-1000 | 11/01/24

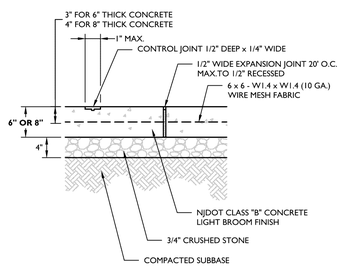

NOTE:
DETAIL IS NOT TO BE USED FOR WAWA. SEE WAWA SPECIFIC DETAIL FOR CONCRETE PAVEMENT.

CONCRETE PAVEMENT DETAIL

NOT TO SCALE | MCNJ-SITE-PVMT-1700 | 10/01/18

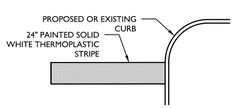

TYPICAL STOP BAR DETAIL

NOT TO SCALE | MCNJ-SITE-MRKG-1100 | 05/01/17

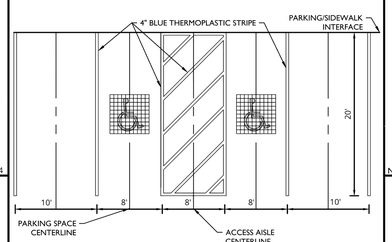

WAWA ADA STRIPING DETAIL

NOT TO SCALE | XX/XX/XX

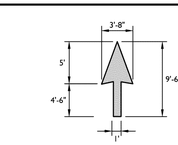

STRAIGHT PAVEMENT ARROW DETAIL

NOT TO SCALE | MCNJ-SITE-MRKG-1200 | 05/01/17

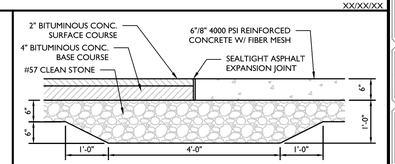

CONCRETE TO ASPHALT TRANSITION DETAIL

NOT TO SCALE | XX/XX/XX

REV	DATE	DRAWN BY	DESCRIPTION
1	7/1/25	MB	REVISED FOR TOWNSHIP SUBMISSION.

Colliers Engineering & Design

www.colliersengineering.com

Copyright © 2025. Colliers Engineering & Design All Rights Reserved. This drawing and all the information contained herein is authorized for use only by the party for whom the services were contracted or to whom it is certified. This drawing may not be copied, reused, disclosed, distributed or relied upon for any other purpose without the express written consent of Colliers Engineering & Design.

Doing Business as MASER CONSULTING

PROTECT YOURSELF
ALL STATES REQUIRE NOTIFICATION OF EXCAVATORS, DESIGNERS, OR ANY PERSON PREPARING TO DISTURB THE EARTH'S SURFACE ANYWHERE IN ANY STATE
FOR STATE SPECIFIC DIRECT PHONE NUMBERS VISIT: WWW.CALL811.COM

Mark Lescavage
2025.07.02 11:36:34-04'00'

Mark Lescavage
NEW JERSEY LICENSED PROFESSIONAL ENGINEER
LICENSE NUMBER: GE40346
COLLIERS ENGINEERING & DESIGN, INC.
N.J. C.O.A. #: 24GA27986500

PRELIMINARY AND FINAL MAJOR SITE PLAN & MAJOR SUBDIVISION PLAN
FOR
AMARANTH AT NORTH BRUNSWICK PHASES 3 & 4

BLOCK 148, LOT 1.01

TOWNSHIP OF NORTH BRUNSWICK
MIDDLESEX COUNTY
NEW JERSEY

Colliers Engineering & Design
HOLMDEL (Headquarters)
101 Crawfords Corner Road, Suite 3400
Holmdel, NJ 07733
Phone: 732.383.1950
COLLIERS ENGINEERING & DESIGN, INC. DOING BUSINESS AS MASER CONSULTING

SCALE:	DATE:	DRAWN BY:	CHECKED BY:
AS SHOWN	6/13/2025	RT	AJU

PROJECT NUMBER: 17001949B
DRAWING NAME: C-DTLS-PHASE3

SHEET TITLE:
CONSTRUCTION DETAILS

SHEET NUMBER:
10.00

NOTE: DO NOT SCALE DRAWINGS FOR CONSTRUCTION.

2017\17001949B\Engineering\Site Plans\Phase 3\C-DTLS-PHASE3.dwg\C-10.00-DETAILS By: PCRICHLOW

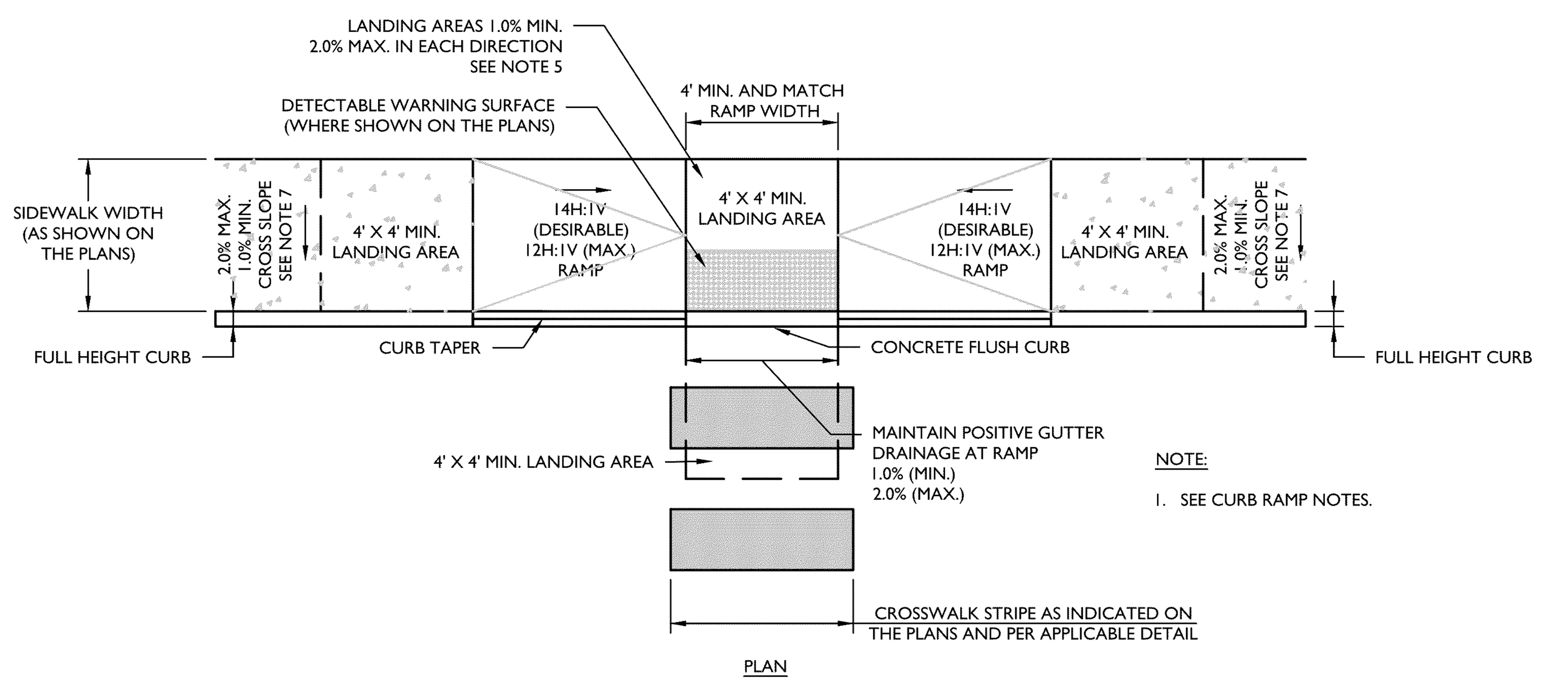

NOTE:

1. SEE CURB RAMP NOTES.

CURB RAMP TYPE 7 DETAIL

NOT TO SCALE — MCNJ-SITE-HADA-1600 — 07/01/20

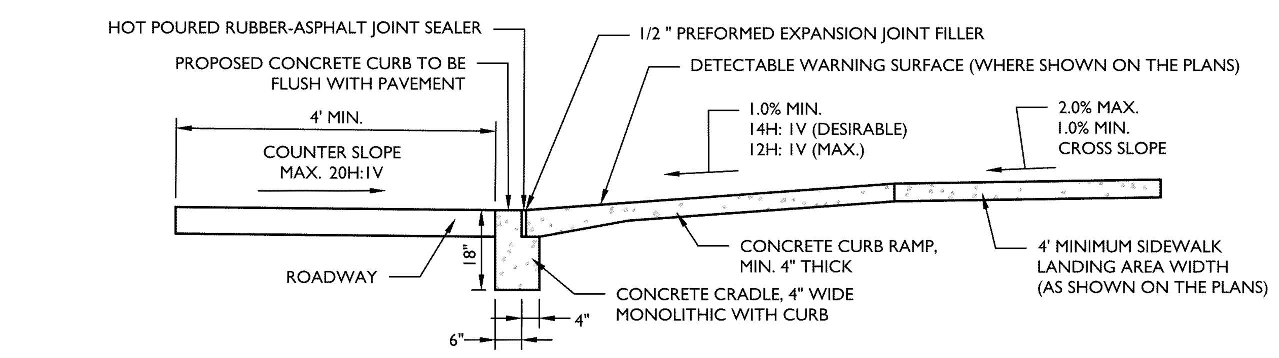

CURB RAMP SECTION B-B

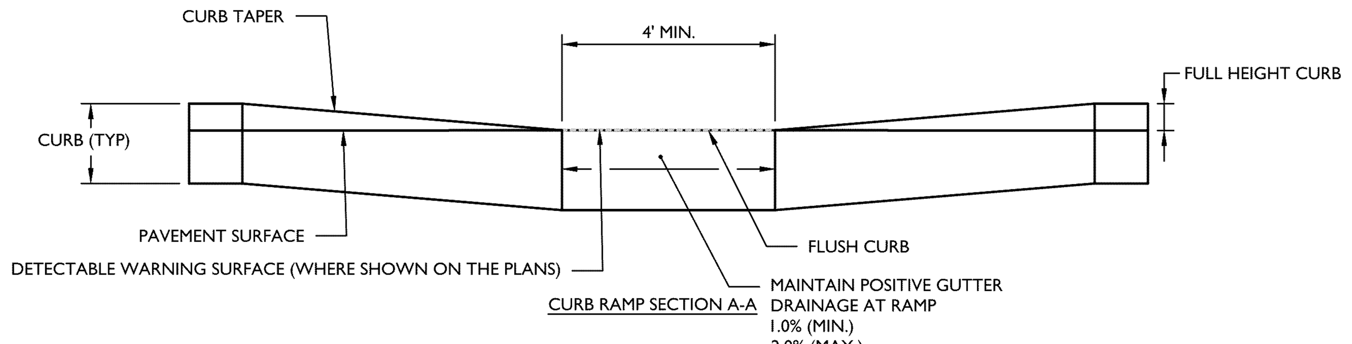

CURB RAMP SECTION A-A

NOTES:

1. FLUSH CURB AT DETECTABLE WARNING SURFACE (WHERE SHOWN ON PLAN) IS TO BE A SMOOTH LEVEL SURFACE THAT IS FLUSH WITH THE ADJOINING PAVEMENT. NO BUMPS OR ROUGH SURFACE ARE ALLOWED. SUCH UNEVENNESS MUST BE MILLED OR GRINDED SMOOTH.
2. CURB TO BE FLUSH WITH ROADWAY PAVEMENT AND CONSTRUCTED WITH CONCRETE REGARDLESS OF THE CURB MATERIAL WHERE AS 1.0% USED THROUGHOUT THE SITE.
3. POSITIVE DRAINAGE IS TO BE MAINTAINED AT RAMP. RAMP IS TO SLOPE TOWARDS PAVEMENT NO PONDING OF WATER IS PERMITTED AT CURB RAMP. PAVEMENT GRADES TO BE ADJUSTED AS NECESSARY TO PROVIDE POSITIVE GUTTER DRAINAGE.
4. AS CONSTRUCTED GUTTER DRAINAGE GRADE ALONG FLUSH CURB AND WITHIN THE CROSSWALK AREA TO BE 1.0% MINIMUM, 2.00% MAXIMUM, WHERE AS 0.5% ABSOLUTE MINIMUM IF DUE TO SITE CONSTRAINTS.
5. DEVIATION FROM THIS DETAIL REQUIRES THE WRITTEN APPROVAL OF THE UNDERSIGNED PROFESSIONAL.

CURB RAMP SECTIONS DETAIL

NOT TO SCALE — MCNJ-SITE-HADA-2000 — 07/01/20

NOTES:

1. CONTRACTOR MUST PREPARE SHOP DRAWINGS OF EACH CURB RAMP FOR SUBMISSION AND APPROVAL OF THE UNDERSIGNED PROFESSIONAL AND THE MUNICIPAL, COUNTY, STATE OR OTHER AGENCY'S ENGINEER HAVING JURISDICTION. DEVIATIONS FROM THE CURB RAMP DETAILS REQUIRE WRITTEN APPROVAL OF THE UNDERSIGNED PROFESSIONAL AND THE MUNICIPAL, COUNTY, STATE OR OTHER AGENCY'S ENGINEER HAVING JURISDICTION.
2. ACCESSIBLE RAMPS:
   a. ON-SITE RAMP OR CURB RAMPS MUST BE INSTALLED IN CONFORMANCE WITH THE CURRENT ADA STANDARDS FOR ACCESSIBLE DESIGN AS PUBLISHED BY THE UNITED STATES DEPARTMENT OF JUSTICE AND MUST ALSO MEET OTHER APPLICABLE LOCAL AND STATE REQUIREMENTS IN EFFECT AT THE DATE OF CONSTRUCTION.
   b. PUBLIC RIGHT OF WAY ACCESSIBLE OR CURB RAMPS MUST BE INSTALLED PURSUANT WITH THE CURRENT UNITED STATES ACCESS BOARD "ACCESSIBILITY GUIDELINES FOR PEDESTRIAN FACILITIES IN THE PUBLIC RIGHT-OF-WAY" (PROWAG).
3. CURB RAMP SLOPE AS CONSTRUCTED IN THE DIRECTION OF TRAVEL CANNOT EXCEED 12H:1V. RAMP SLOPES OF 14H:1V ARE THE PREFERRED SLOPE TO MAINTAIN A LEVEL OF CONSTRUCTION TOLERANCE. MINIMUM CURB RAMP CROSS-SLOPE IS TO BE 0.50%, MAXIMUM CANNOT EXCEED 2.00%.
4. CURB RAMP SIDE FLARE SLOPES ARE TO BE 14H:1V DESIRABLE, 12H:1V MAXIMUM, BUT MAY BE 10H:1V UPON APPROVAL OF THE ENGINEER. WHERE SIDE FLARES ARE NOT REQUIRED, PROVIDE AN 18" CURB TAPER TO THE FLUSH CURB PER THE DETAIL.
5. LANDING AREA AT THE TOP AND BOTTOM OF THE CURB RAMP (AKA. CLEAR OR TURNING SPACE) MUST BE KEPT CLEAR OF OBSTRUCTIONS. THE LANDING AREA IS TO BE 4' X 4' MINIMUM AND MATCH THE WIDTH OF THE CURB RAMP. INCREASED THE DEPTH OF MINIMUM LANDING AREA TO 5 FEET IF CONSTRAINED AT THE BACK OF THE SIDEWALK.
6. THE LANDING AREA MUST HAVE AN ABSOLUTE MINIMUM SLOPE OF 0.5% AND A MAXIMUM SLOPE OF 2%, WHEREAS 1.0% TO 1.5% IS THE DESIRED DESIGN SLOPE IN THE DIRECTION OF TRAVEL AND FOR THE CROSS SLOPE.
7. SIDEWALK CROSS SLOPE MUST BE A MINIMUM OF 1% AND MAXIMUM 2%, WHEREAS 1.5% IS THE DESIRED DESIGN CROSS SLOPE. SIDEWALK BEYOND LANDING AREA MUST HAVE A MINIMUM 1% TO MAXIMUM 5% OF LONGITUDINAL SLOPE IN THE DIRECTION OF TRAVEL, AND A 1% TO 2% MAX. CROSS SLOPE.
8. FLUSH CURB AT CURB RAMP MUST BE MINIMUM 4' WIDE AND FLUSH WITH PAVEMENT. THE SEGMENT OF FLUSH CURB MUST BE MADE WITH CONCRETE CURB REGARDLESS OF THE CURB MATERIAL USED THROUGHOUT THE SITE.
9. GUTTER SLOPE THE ALONG CURB RAMP MUST MAINTAIN POSITIVE DRAINAGE WITH A 1.0 % TO 1.5% GUTTER SLOPE PREFERRED, WHEREAS 0.5% AS THE ABSOLUTE MINIMUM AND 2.0% IS MAXIMUM ALONG THE LENGTH OF THE FLUSH CURB.
10. CROSSWALKS AND PAVEMENT MARKINGS MUST BE INSTALLED AS DENOTED ON SITE PLAN. CURB RAMP MUST BE WHOLLY CONTAINED WITHIN THE CROSSWALK CROSSING.
11. THE RAMP SURFACE MUST HAVE A SLIP RESISTANT, BROOM FINISH PERPENDICULAR TO THE PATH OF TRAVEL.
12. CONCRETE EXPANSION JOINTS MUST HAVE A FIRM SURFACE WITH ¼" BEVELED CONCRETE EDGES. THE JOINT SURFACE SHALL NOT BE MORE THAN ¼" BELOW THE ADJOINING CONCRETE SURFACE.
13. DETECTABLE WARNING SURFACES ARE TO BE PROVIDED AT CURB RAMPS, BLENDED TRANSITION AT PEDESTRIAN STREET CROSSINGS AND PEDESTRIAN REFUGE ISLANDS WHEN THOSE ARE WITHIN THE PUBLIC RIGHT-OF-WAY, AND WHERE AS SHOWN ON THE PLANS.
14. SEE SEPARATE DETAILS FOR "DETECTABLE WARNING SURFACE" AND "CURB RAMP SECTIONS".

CURB RAMP NOTES

NOT TO SCALE — MCNJ-SITE-HADA-2500 — 07/01/20

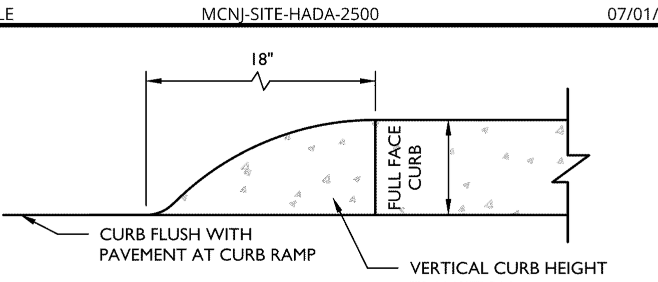

NOTES:

1. TO BE UTILIZED WHEN OPTIONAL CONCRETE SIDE FLARE IS NOT SHOWN ON PLAN.

CURB RAMP CURB TAPER DETAIL

NOT TO SCALE — MCNJ-SITE-HADA-2301 — 05/01/17

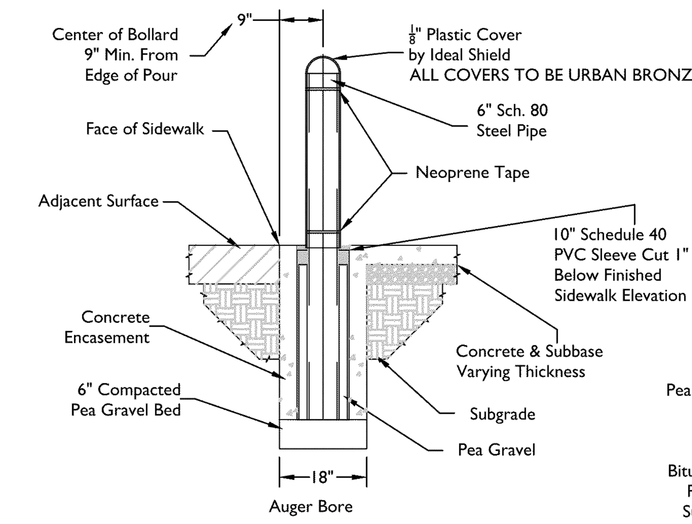

CONCRETE AREAS

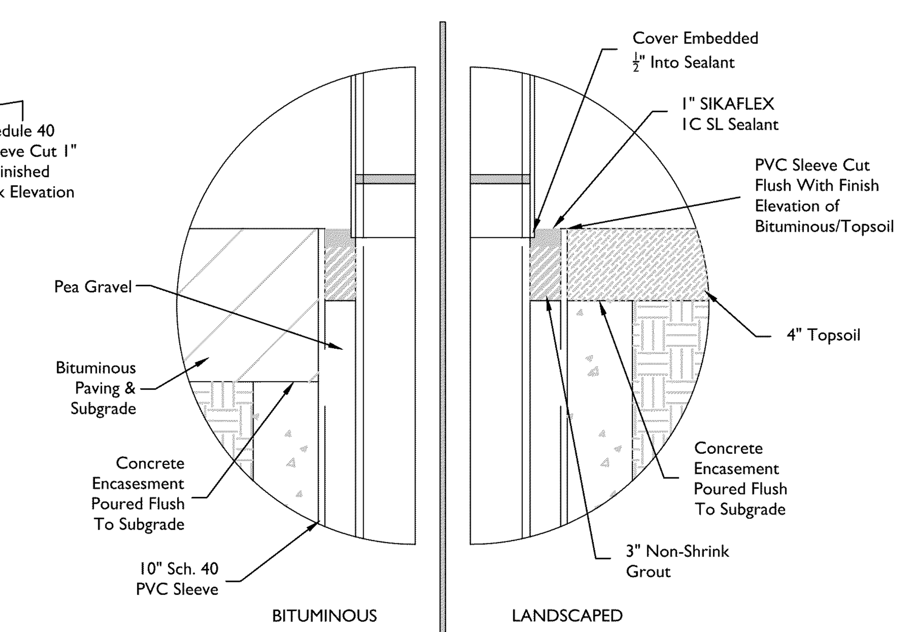

CAULK/GROUT DETAIL FOR LANDSCAPED & BITUMINOUS AREAS

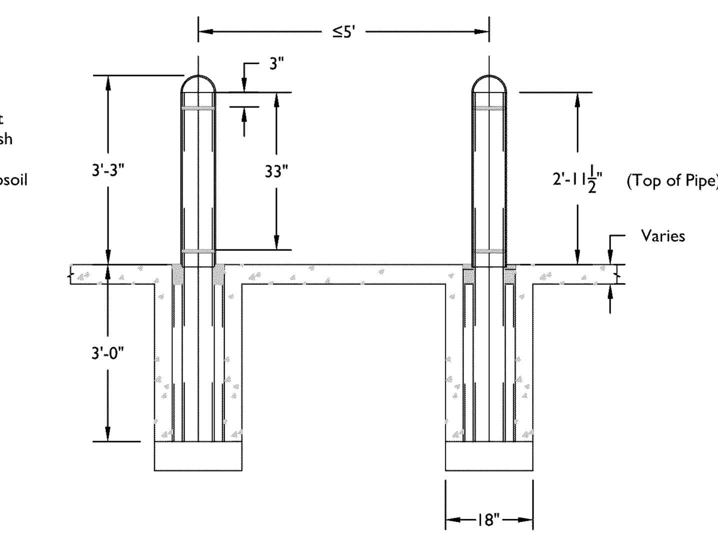

GENERAL BOLLARD DIMENSIONS AND SPACING AROUND BUILDING

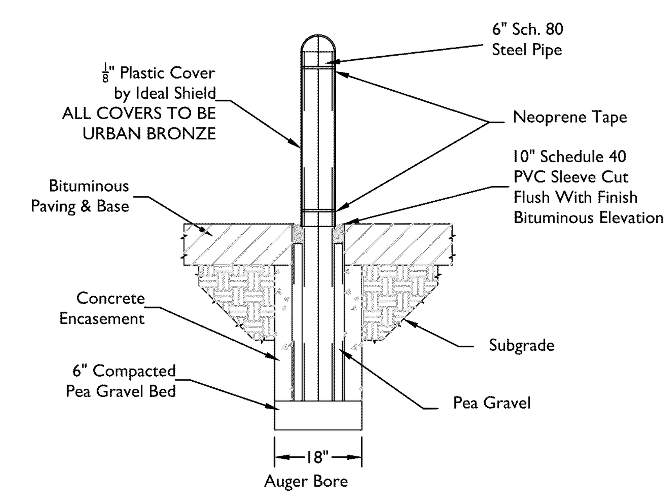

BITUMINOUS AREAS

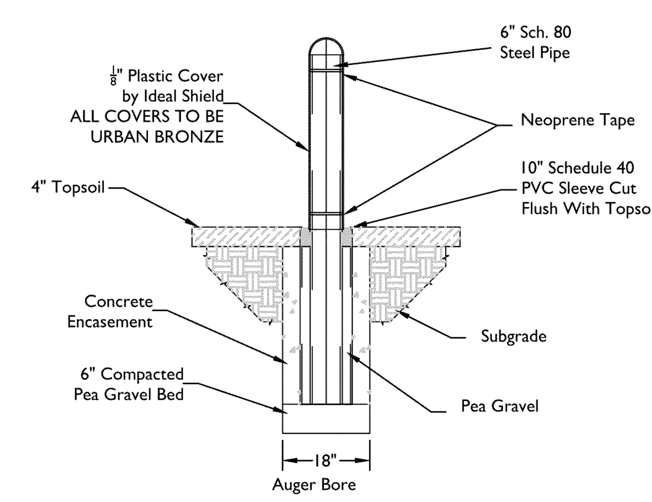

LANDSCAPED AREAS

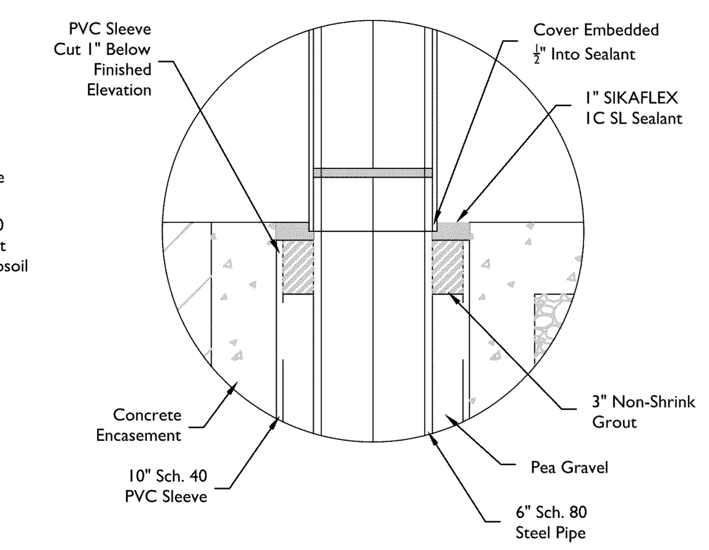

GENERAL DETAILS AND CAULK/GROUT DETAIL FOR CONCRETE AREAS

WAWA BOLLARD DETAIL

NOT TO SCALE — XX/XX/XX

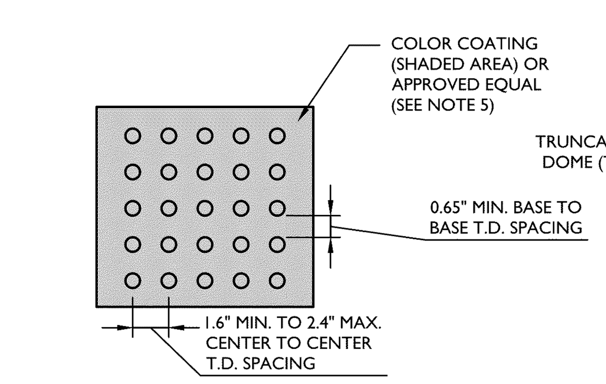

TRUNCATED DOME PLAN VIEW ENLARGEMENT

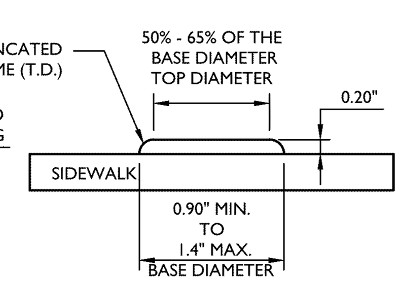

TRUNCATED DOME ELEVATION

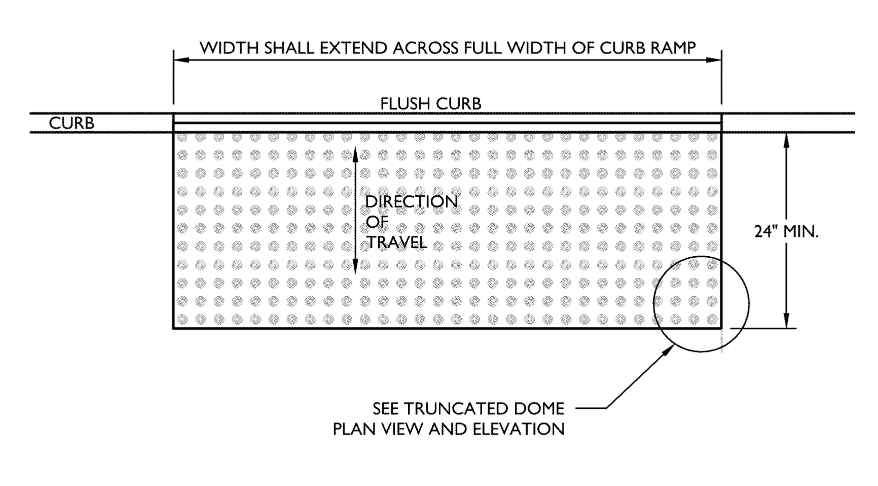

PLAN VIEW

NOTES:

1. THE DETECTABLE WARNING SURFACE IS TO BE MANUFACTURED MATS THAT ARE EMBEDDED AND CAST-IN-PLACE IN THE CONCRETE.
2. IN LIEU OF A CAST IN PLACE DETECTABLE WARNING SURFACE, THE CONTRACTOR MAY UTILIZE A SURFACE APPLIED DETECTABLE WARNING SURFACE WITH PRIOR APPROVAL OF THE UNDERSIGNED ENGINEER AND PRIOR TO POURING OF THE CONCRETE RAMP.
3. THE CONTRACTOR MUST SUBMIT TO THE ENGINEER FOR APPROVAL A SHOP DRAWING OF THE DETECTABLE WARNING SURFACE PRIOR TO CONSTRUCTION.
4. THE CONTRACTOR MUST PROVIDE A MANUFACTURER CERTIFICATION THAT THE DETECTABLE WARNING SURFACE COMPLIES WITH THE CURRENT ADA STANDARDS FOR ACCESSIBLE DESIGN AS PUBLISHED BY THE DEPARTMENT OF JUSTICE AND THE ADA STANDARDS AS SUPPORTED BY THE UNITED STATES ACCESS BOARD, AND THE STATE AND/OR LOCAL ADA STANDARDS.
5. **SAFETY RED** AS APPROVED BY THE LOCAL JURISDICTION PRIOR TO INSTALLATION. DETECTABLE WARNING SURFACES MUST CONTRAST VISUALLY WITH ADJACENT WALKING SURFACES EITHER LIGHT-ON-DARK, OR DARK-ON-LIGHT. ALTERNATIVE COLOR MAY BE USED PROVIDED SUCH COLOR COMPLIES WITH CURRENT ADA STANDARDS.
6. DETECTABLE WARNINGS ARE TO CONSIST OF A SURFACE OF TRUNCATED DOMES.
7. TRUNCATED DOMES IN A DETECTABLE WARNING SURFACE MUST HAVE A BASE DIAMETER OF 0.9 INCH (23 mm) MINIMUM AND 1.4 INCHES (36 mm) MAXIMUM, A TOP DIAMETER OF 50 PERCENT OF THE BASE DIAMETER MINIMUM TO 65 PERCENT OF THE BASE DIAMETER MAXIMUM, AND A HEIGHT OF 0.2 INCH (5.1 mm).
8. TRUNCATED DOMES IN DETECTABLE WARNING SURFACE MUST HAVE A CENTER-TO-CENTER SPACING OF 1.6 INCHES (41 mm) MINIMUM AND 2.4 INCHES (61 mm) MAXIMUM, AND A BASE-TO-BASE SPACING OF 0.65 INCH (17 mm) MINIMUM, MEASURED BETWEEN THE MOST ADJACENT DOMES ON A SQUARE GRID.
9. SOME DETECTABLE WARNING PRODUCTS REQUIRE A CONCRETE BORDER FOR PROPER INSTALLATION. WHERE REQUIRED BY THE MANUFACTURER, THE CONCRETE BORDER MUST NOT EXCEED 2 INCHES (51 mm).
10. DETECTABLE WARNING SURFACES ARE NOT BE PLACED ON PAVING OR EXPANSION JOINTS AT CURB RAMPS. THE ROWS OF TRUNCATED DOMES IN DETECTABLE WARNING SURFACES ARE TO BE ALIGNED PERPENDICULAR TO THE GRADE BREAK BETWEEN THE RAMP RUN AND THE STREET SO PEDESTRIANS WHO USE WHEELCHAIRS CAN "TRACK" BETWEEN THE DOMES.
11. ON PERPENDICULAR CURB RAMPS, DETECTABLE WARNING SURFACES ARE TO BE PLACED AS FOLLOWS:
    a. WHERE THE ENDS OF THE BOTTOM GRADE BREAK ARE IN FRONT OF THE BACK OF CURB, DETECTABLE WARNING SURFACES ARE TO BE PLACED AT THE BACK OF CURB.
    b. WHERE THE ENDS OF THE BOTTOM GRADE BREAK ARE BEHIND THE BACK OF CURB AND THE DISTANCE FROM EITHER END OF THE BOTTOM GRADE BREAK TO THE BACK OF CURB IS 5.0 FT OR LESS, DETECTABLE WARNING SURFACES ARE TO BE PLACED ON THE RAMP RUN WITHIN ONE DOME SPACING OF THE BOTTOM GRADE BREAK.
    c. WHERE THE ENDS OF THE BOTTOM GRADE BREAK ARE BEHIND THE BACK OF CURB AND THE DISTANCE FROM EITHER END OF THE BOTTOM GRADE BREAK TO THE BACK OF CURB IS MORE THAN 5.0 FT, DETECTABLE WARNING SURFACES ARE TO BE PLACED ON THE LOWER LANDING AT THE BACK OF CURB.
12. ON PARALLEL CURB RAMPS, DETECTABLE WARNING SURFACES ARE TO BE PLACED ON THE TURNING SPACE AT THE FLUSH TRANSITION BETWEEN THE STREET AND SIDEWALKS.
13. ON BLENDED TRANSITIONS, DETECTABLE WARNING SURFACES ARE TO BE PLACED AT THE BACK OF CURB. WHERE RAISED PEDESTRIAN STREET CROSSINGS, DEPRESSED CORNERS OR OTHER LEVEL PEDESTRIAN STREET CROSSINGS ARE PROVIDED, DETECTABLE WARNING SURFACES ARE TO BE PLACED AT THE FLUSH TRANSITION BETWEEN THE STREET AND THE SIDEWALK.

DETECTABLE WARNING SURFACE DETAIL

NOT TO SCALE — MCNJ-SITE-HADA-2100 — 07/01/20

ADA INSTRUCTIONS TO CONTRACTOR

MCNJ-SITE-HADA-2600 — 09/01/22

NOTES:

1. CONTRACTOR MUST EXERCISE APPROPRIATE CARE AND PRECISION IN CONSTRUCTION OF ADA (HANDICAPPED) ACCESSIBLE COMPONENTS FOR THE SITE/PROJECT. THESE COMPONENTS, AS CONSTRUCTED, MUST COMPLY WITH THE LATEST FEDERAL ADA STANDARDS FOR ACCESSIBLE DESIGN, AND CONSTRUCTION WITHIN THE PUBLIC RIGHT-OF-WAY MUST COMPLY WITH THE LATEST FEDERAL PROPOSED "ASSESSIBILITY GUIDELINES FOR PEDESTRIAN FACILITIES IN THE PUBLIC RIGHT-OF-WAY" (PROWAG).
2. FINISHED SURFACES ALONG THE ACCESSIBLE ROUTE OF TRAVEL FROM PARKING SPACE, PUBLIC TRANSPORTATION, PEDESTRIAN ACCESS, INTER-BUILDING ACCESS, TO POINTS OF ACCESSIBLE BUILDING ENTRANCE/EGRESS, MUST COMPLY WITH THESE ADA CODE REQUIREMENTS AND ANY SUPPLEMENTAL STATE REQUIREMENTS. THESE INCLUDE, BUT ARE NOT LIMITED TO THE FOLLOWING:

   (NOTE: THIS LIST IS NOT INTENDED TO CAPTURE EVERY APPLICABLE FEDERAL, STATE AND LOCAL RULE AND REGULATION. THE CONTRACTOR IS RESPONSIBLE FOR COMPLIANCE WITH THE LAW, WHETHER OR NOT STATED SPECIFICALLY HEREIN):

   A. PARKING SPACES AND PARKING AISLES - SLOPE MUST NOT EXCEED 1:48 (1/4" PER FOOT OR NORMALLY 2.0%) IN ANY DIRECTION.
   B. CURB RAMPS- SLOPES MUST NOT EXCEED 1:12 (8.3%).
   C. LANDINGS
      i. LANDINGS AT CURB RAMPS - MUST BE 4 FT. MIN., X 4 FT. MIN. AND ARE TO BE INCREASED TO 5 FEET WHERE THE LANDING SPACE (TURNING SPACE) IS CONSTRAINED AT THE BACK OF THE SIDEWALK.
      ii. LANDINGS AT RAMPS - MUST BE 5 FT MIN. IN THE DIRECTION OF TRAVEL AND BE PROVIDED AT EACH END OF THE RAMP, MUST PROVIDE POSITIVE DRAINAGE (1 % MIN.), AND MUST NOT EXCEED 1:48 (1/4" PER FOOT OR NORMALLY 2.0%) IN ANY DIRECTION. WHEN LANDING IS ALSO A TURNING SPACE, IT MUST BE A MINIMUM 5 FT X 5 FT.
      iii. LANDINGS AT DOORWAYS - SEE NOTE F BELOW.
   D. PATH OF TRAVEL ALONG ON-SITE ACCESSIBLE ROUTE - MUST PROVIDE A 36 INCH (EXCLUDING THE CURB) OR GREATER UNOBSTRUCTED WIDTH OF TRAVEL, (CAR OVERHANGS MUST NOT REDUCE THIS MINIMUM WIDTH). IN A PUBLIC RIGHT-OF-WAY, THE MINIMUM WIDTH EXCLUDING THE CURB IS 4 FT. THE SLOPE MUST BE NO GREATER THAN 1:20 (5.0%) IN THE DIRECTION OF TRAVEL AND MUST NOT EXCEED 1:48 (1/4" PER FOOT OR NORMALLY 2.0%) IN CROSS SLOPE.
   E. WHERE PATH OF TRAVEL WILL BE GREATER THAN 1:20 (5.0%), AN ADA RAMP, WITH A MAXIMUM SLOPE OF 1:12 (8.3%), FOR A MAXIMUM RISE OF 30 INCHES, MUST BE PROVIDED. THE RAMP MUST HAVE A MINIMUM. CLEAR WIDTH OF 36 INCHES, HAVE ADA HAND RAILS AND LANDINGS (MIN. 5 FT. LONG IN THE DIRECTION OF TRAVEL) ON EACH END THAT ARE SLOPED A MIN. 1 % AND NO MORE THAN 1:48 (1/4" PER FOOT OR NOMINALLY 2.0%) FOR POSITIVE DRAINAGE.
   F. EXTERIOR DOORWAYS - MUST HAVE A "LEVEL" LANDING AREA ON THE EXTERIOR SIDE OF THE DOOR THAT IS SLOPED NO MORE THAN 1:48 (1/4" PER FOOT OR NORMALLY 2.0%) FOR POSITIVE DRAINAGE. THIS LANDING AREA IS GENERALLY 5 FT X 5 FT, EXCEPT WHERE OTHERWISE PERMITTED BY ADA STANDARDS. (SEE APPLICABLE CODE SECTIONS).
3. IT IS RECOMMENDED THAT THE CONTRACTOR REVIEW THE INTENDED CONSTRUCTION WITH THE LOCAL BUILDING CODE OFFICIAL, INCLUDING WHETHER OR NOT FALL PROTECTION IS REQUIRED.
4. IT IS RECOMMENDED THAT THE CONTRACTOR CHECK THE SLOPE OF FORMWORK FOR COMPLIANCE WITH ADA STANDARDS PRIOR TO POURING CONCRETE.

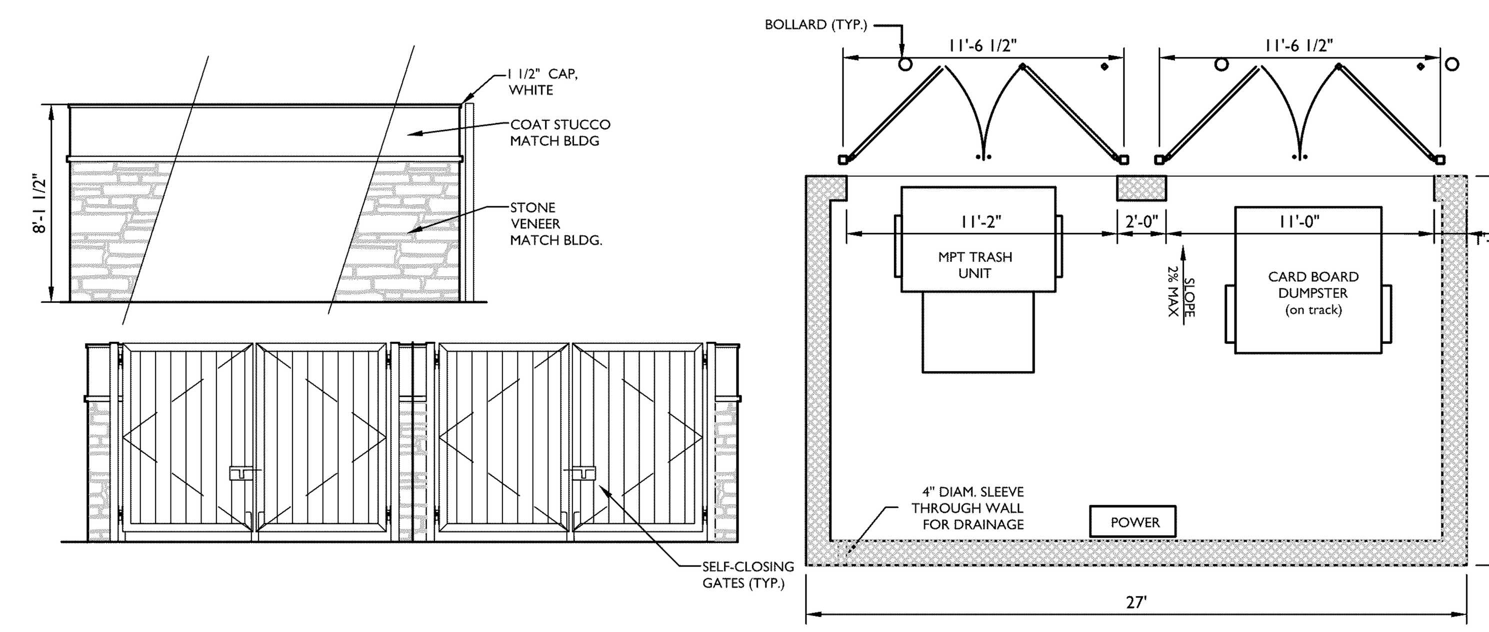

WAWA TRASH ENCLOSURE DETAIL

NOT TO SCALE — XX/XX/XX

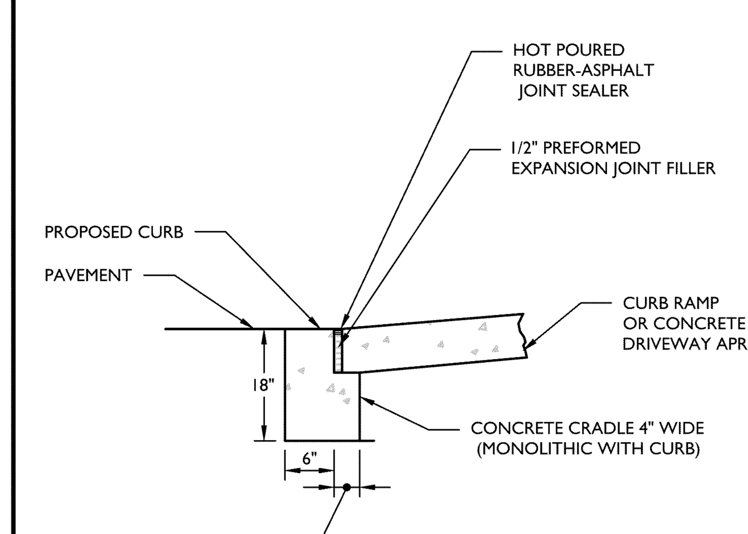

FLUSH CURB AND CRADLE DETAIL

NOT TO SCALE — MCNJ-SITE-HADA-2300 — 05/01/17

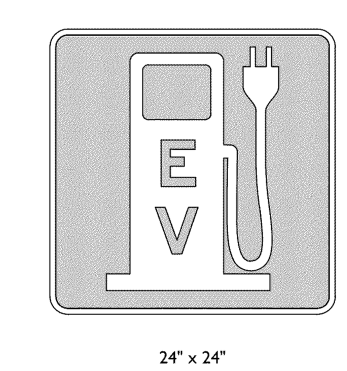

24" x 24"

COLORS:
LEGEND = WHITE (RETROREFLECTIVE)
BACKGROUND = BLUE (RETROREFLECTIVE)

D9-11B SIGN DETAIL

NOT TO SCALE — MCCM-SIGN-REGU-D9-11B — 10/01/22

Colliers Engineering & Design

www.colliersengineering.com

Copyright © 2025. Colliers Engineering & Design All Rights Reserved. This drawing and all the information contained herein is authorized for use only by the party for whom the services were contracted or to whom it is certified. This drawing may not be copied, reused, disclosed, distributed or relied upon for any other purpose without the express written consent of Colliers Engineering & Design.

Doing Business as MASER CONSULTING

811 Know what's below. Call before you dig.

PROTECT YOURSELF
ALL STATES REQUIRE NOTIFICATION OF EXCAVATORS, DESIGNERS, OR ANY PERSON PREPARING TO DISTURB THE EARTH'S SURFACE ANYWHERE IN ANY STATE

FOR STATE SPECIFIC DIRECT PHONE NUMBERS
VISIT: WWW.CALL811.COM

REV	DATE	DRAWN BY	DESCRIPTION
1	7/1/25	MB	REVISED FOR TOWNSHIP SUBMISSION.

Mark Lescavage 2025.07.02 11:37:35-04'00'

Mark Lescavage
NEW JERSEY LICENSED PROFESSIONAL ENGINEER
LICENSE NUMBER: GE40346
COLLIERS ENGINEERING & DESIGN, INC.
N.J. C.O.A. #: 24GA27986500

PRELIMINARY AND FINAL MAJOR SITE PLAN & MAJOR SUBDIVISION PLAN FOR AMARANTH AT NORTH BRUNSWICK PHASES 3 & 4

BLOCK 148, LOT 1.01

TOWNSHIP OF NORTH BRUNSWICK
MIDDLESEX COUNTY
NEW JERSEY

Colliers Engineering & Design
HOLMDEL (Headquarters)
101 Crawfords Corner Road, Suite 3400
Holmdel, NJ 07733
Phone: 732.383.1950
COLLIERS ENGINEERING & DESIGN, INC. DOING BUSINESS AS MASER CONSULTING

SCALE:	DATE:	DRAWN BY:	CHECKED BY:
AS SHOWN	6/13/2025	RT	AJU

PROJECT NUMBER:	DRAWING NAME:
17001949B	C-DTLS-PHASE3

SHEET TITLE: CONSTRUCTION DETAILS

SHEET NUMBER: 10.01

NOTE: DO NOT SCALE DRAWINGS FOR CONSTRUCTION.

2017\17001949B\Engineering\Site Plans\Phase 3\C-DTLS-PHASE3.dwg\C-10.01-DETAILS By: PCRICHLOW

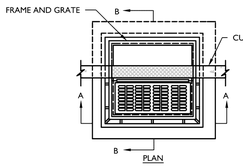

NOTES:

1. INVERTS TO BE ELIMINATED IN BOTTOM OF TERMINAL INLETS. BOTTOMS SHALL BE DISHED AND SLOPED TOWARDS THE OUTLET PIPE AT A RATE OF GRADE OF 2 INCHES PER FOOT.
2. THIS INLET SHALL BE CONSTRUCTED OF CONCRETE OR PRECAST CONCRETE. IF CONCRETE BLOCK IS USED, THE BOTTOM SHALL BE AS SHOWN FOR CONCRETE & THE OUTSIDE OF THE WALLS SHALL BE PLASTERED WITH 1/2" COAT OF 1:2 CEMENT SAND MORTAR. THE INSIDE WALL JOINTS SHALL BE STRUCK AND POINTED.
3. PROVIDE 7/8" DIA. X 7" X 12", 12" O.C. COPOLYMER POLYPROPYLENE PLASTIC STEPS WITH 1/2" DIA. GRADE 60 STEEL REINFORCEMENT, PS2-PF OR PS2-B WITH PRECAST PRESS FIT INSERTS, OR APPROVED EQUIVALENT.
4. INLET FRAME AND GRATES TO BE CAMPBELL FOUNDRY **# 2618** WITH **6"** OR **8"** TYPE **N** ECO CURB PIECE, OR APPROVED EQUAL.
5. WHEN DEPTH IS GREATER THAN 12', THE WALLS SHOULD BE 8" THICK CONCRETE OR SOLID CONCRETE BLOCK, AND THE FOOTING SHALL BE EXTENDED TO **MIN. 6"** BEYOND THE OUTSIDE WALLS.
6. ALL CONCRETE TO BE NJDOT CLASS "B".
7. IN ACID SOILS, TWO COATS OF BITUMASTIC WATER PROOFING SHALL BE APPLIED PER MANUFACTURER'S SPECIFICATION.
8. INLETS SHALL BE CONSTRUCTED IN ACCORDANCE WITH H-20 LOADING REQUIREMENTS.

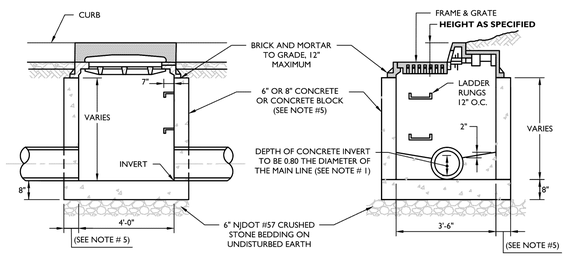

TYPE 'B' INLET DETAIL

NOT TO SCALE MCNJ-UTIL-STRM-1100 10/01/24

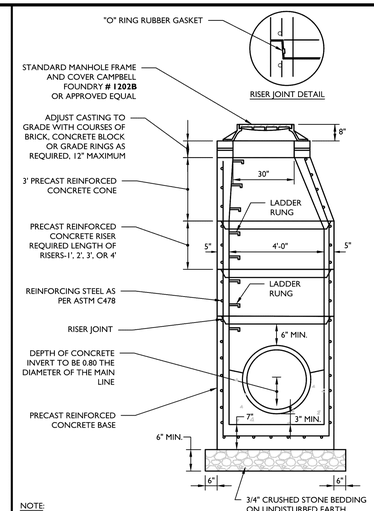

NOTE:

1. IN ACID SOILS, TWO COATS OF BITUMASTIC WATER PROOFING SHALL BE APPLIED PER MANUFACTURER'S SPECIFICATION.
2. ALL CONCRETE TO BE NJDOT CLASS "B".
3. MANHOLES SHALL BE CONSTRUCTED IN ACCORDANCE WITH HS-25 LOADING REQUIREMENTS.

PRECAST CONCRETE STORM MANHOLE 4' DIA. DETAIL

NOT TO SCALE MCNJ-UTIL-STRM-1600 07/01/21

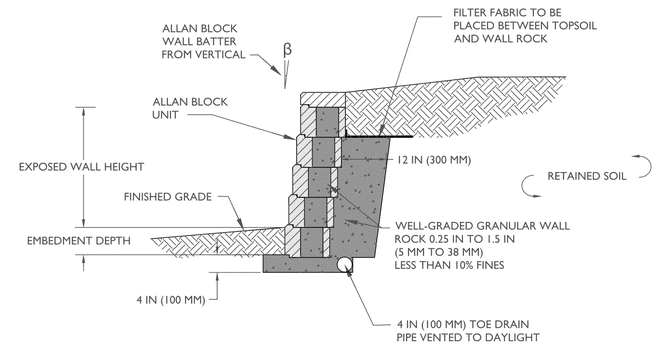

NOTES:

1. THIS DETAIL IS A SCHEMATIC REPRESENTATION FOR MUNICIPAL AND/OR AGENCY APPROVALS AND IS NOT INTENDED TO BE USED FOR CONSTRUCTION.
2. CONTRACTOR TO PROVIDE SITE-SPECIFIC SHOP DRAWINGS AND STRUCTURAL DESIGN CALCULATIONS FOR EACH RETAINING WALL PREPARED BY A STATE LICENSED PROFESSIONAL ENGINEER FOR REVIEW AND APPROVAL PRIOR TO CONSTRUCTION.
3. MODULAR ALLAN BLOCK WALL TO BE INSTALLED IN ACCORDANCE WITH MANUFACTURER'S INSTRUCTIONS.
4. A SAFETY BARRIER (FENCING) IS REQUIRED ON ALL WALLS WHERE THE WALL HEIGHT EXCEEDS 30". PLACEMENT AND INSTALLATION METHOD OF THE PROPOSED FENCING TO BE IN ACCORDANCE WITH MANUFACTURER'S SPECIFICATIONS.

TYPICAL GRAVITY WALL SECTION (MAXIMUM 4FT. DESIGN HEIGHT) DETAIL

NOT TO SCALE MCCM-SITE-WALL-1000 MOD: 06/27/25 10/01/19

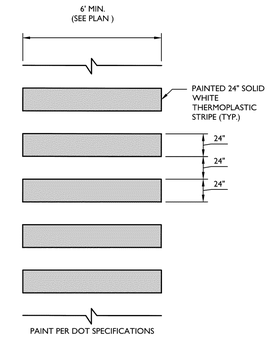

PEDESTRIAN CROSSWALK DETAIL

NOT TO SCALE MCNJ-SITE-MRKG-1401 05/01/17

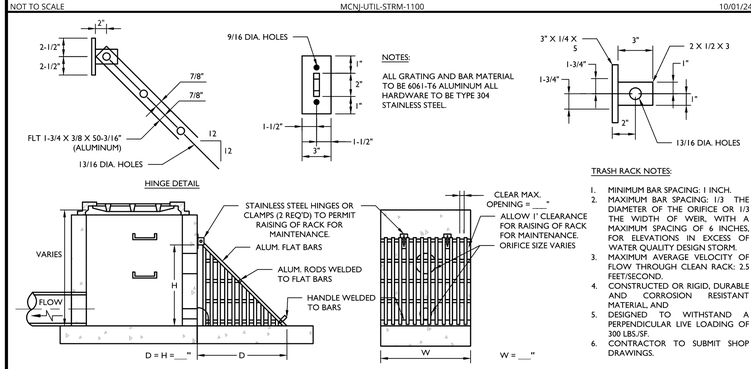

NOTES:

ALL GRATING AND BAR MATERIAL TO BE 6061-T6 ALUMINUM ALL HARDWARE TO BE TYPE 304 STAINLESS STEEL.

TRASH RACK NOTES:

1. MINIMUM BAR SPACING: 1 INCH.
2. MAXIMUM BAR SPACING: 1/3 THE DIAMETER OF THE ORIFICE OR 1/3 THE WIDTH OF WEIR, WITH A MAXIMUM SPACING OF 6 INCHES, FOR ELEVATIONS IN EXCESS OF WATER QUALITY DESIGN STORM.
3. MAXIMUM AVERAGE VELOCITY OF FLOW THROUGH CLEAN RACK: 2.5 FEET/SECOND.
4. CONSTRUCTED OR RIGID, DURABLE AND CORROSION RESISTANT MATERIAL, AND
5. DESIGNED TO WITHSTAND A PERPENDICULAR LIVE LOADING OF 300 LBS./SF.
6. CONTRACTOR TO SUBMIT SHOP DRAWINGS.

SLANTED TRASH RACK DETAIL

NOT TO SCALE MCNJ-UTIL-STMW-2002 06/01/19

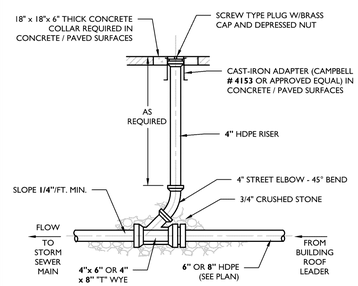

ROOF LEADER CLEANOUT DETAIL

NOT TO SCALE MCNJ-UTIL-STRM-1900 05/01/17

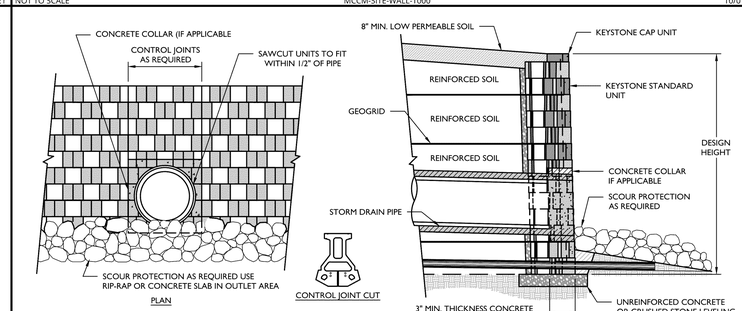

NOTE:

1. FOR PIPES LARGER THAN 24", A CONCRETE COLLAR MAY BE CAST AROUND PIPE FOR EASE OF CONSTRUCTION AND APPEARANCE.

TYPICAL PIPE OUTLET DETAIL

NOT TO SCALE MCCM-SITE-WALL-1300 07/01/19

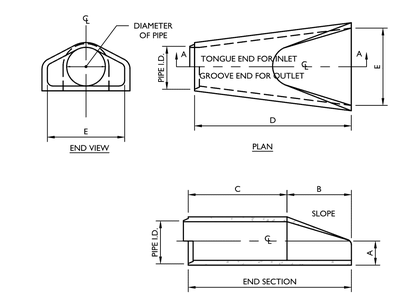

PIPE INNER DIA.	WALL THICK	A	B	C	D	E	SLOPE
12"	2"	4"	24"	48 1/4"	72 1/4"	30"	3:1
15"	2 1/4"	6"	27"	46"	73"	30"	3:1
18"	2 1/2"	9"	27"	46"	73"	36"	3:1
24"	3"	9 1/2"	43 1/2"	30"	73 1/2"	48"	3:1
30"	3 1/2"	12"	54"	19 3/4"	73 3/4"	60"	3:1
36"	4"	15"	63"	34 3/4"	97 3/4"	72"	3:1
42"	4 1/2"	21"	63"	35"	98"	78"	3:1
48"	5"	24"	72"	26"	98"	84"	3:1
54"	5 1/2"	27"	65"	35"	100"	90"	2.4:1
60"	6"	30"	60"	39"	99"	96"	2:1
66"	6 1/2"	32"	78"	21"	99"	102"	2:1
72"	7"	34"	78"	21"	99"	108"	2:1

NOTES:

1. REINFORCING IN THE "C" PORTION SHALL BE THE SAME AS SPECIFIED FOR CONCRETE PIPE ASTM C76 AND AASHTO M170 CLASS III FOR THE SIZE OF CONNECTING PIPE.
2. ALL CONCRETE SHALL BE NJDOT CLASS "B".
3. VARIATIONS IN MANUFACTURING DIMENSIONS SHALL BE AS CALLED FOR IN ASTM C76 AND AASHTO M170.
4. PIPE END SECTION CONNECTION SHALL MATCH JOINTS OF STANDARD PIPE DETAILS.

CONCRETE FLARED END SECTION DETAIL

NOT TO SCALE MCNJ-UTIL-STRM-2200 05/01/17

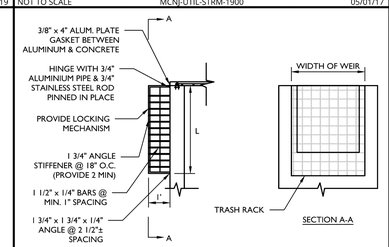

TRASH RACK NOTES:

1. MINIMUM BAR SPACING: 1 INCH.
2. MAXIMUM BAR SPACING: 1/3 THE DIAMETER OF THE ORIFICE OR. 1/3 THE WIDTH OF WEIR, WITH A MAXIMUM SPACING OF 6 INCHES, FOR ELEVATIONS IN EXCESS OF WATER QUALITY DESIGN STORM.
3. MAXIMUM AVERAGE VELOCITY OF FLOW THROUGH CLEAN RACK: 2.5 FEET/SECOND.
4. CONSTRUCTED OR RIGID, DURABLE AND CORROSION RESISTANT MATERIAL, AND
5. DESIGNED TO WITHSTAND A PERPENDICULAR LIVE LOADING OF 300 LBS./SF.
6. CONTRACTOR TO SUBMIT SHOP DRAWINGS.

FLAT TRASH RACK DETAIL

NOT TO SCALE MCNJ-UTIL-STMW-2000 05/01/17

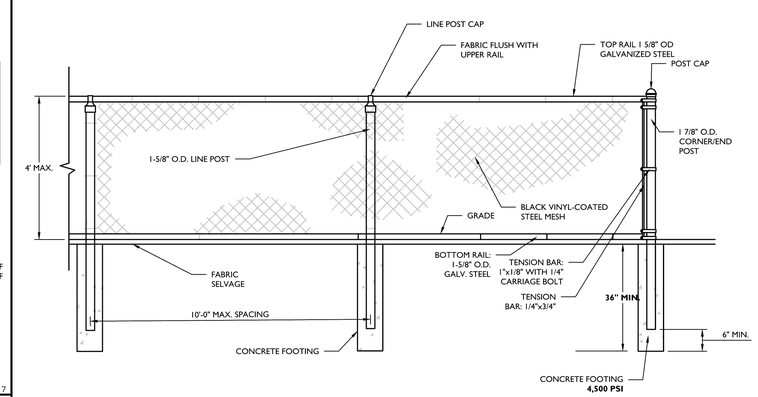

NOTES:

1. WIRE MESH SHALL BE 1" MESH, 11 GAUGE POWDER COATED STEEL CHAIN LINK FABRIC, WITH KNUCKLED SELVAGE (KK) ON BOTH TOP AND BOTTOM.
2. FENCE FRAMEWORK RAIL AND POST SHALL BE ASTM GROUP 1A, HOT DIP GALVANIZED STEEL PIPE, 16 GAUGE, CLASS 1 ZINC COATED, REGULAR STRENGTH GRADE ASTM 1083, 30,000 PSI YIELD STEEL SCHEDULE 40 ROUND PIPE.
3. BAR LENGTH AND POST HEIGHT ABOVE GRADE PER FENCE HEIGHT AND MANUFACTURER'S SPECIFICATIONS.
4. COLOR OF THE WIRE MESH TO BE BLACK UNLESS OTHERWISE SPECIFIED ON THE PLANS.
5. END AND CORNER POST TOP SHALL BE DOME SHAPE.
6. FOOTING WIDTH TO BE (4) X POST WIDTH, MINIMUM DEPTH **36"**, **4,500 PSI** CONCRETE OR AS PER MANUFACTURER'S RECOMMENDATIONS FOR INSTALLING ABOVE THE RETAINING WALL.

4' HIGH CHAIN LINK FENCE DETAIL

NOT TO SCALE MCCM-SITE-FNCE-1201 07/01/19

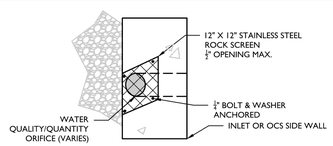

ROCK SCREEN

NOT TO SCALE GNRL-DTLS-STND-GRID XX/XX/XX

Colliers Engineering & Design

www.colliersengineering.com

Copyright © 2025. Colliers Engineering & Design All Rights Reserved. This drawing and all the information contained herein is authorized for use only by the party for whom the services were contracted or to whom it is certified. This drawing may not be copied, reused, disclosed, distributed or relied upon for any other purpose without the express written consent of Colliers Engineering & Design.

Doing Business as MASER CONSULTING

PROTECT YOURSELF
ALL STATES REQUIRE NOTIFICATION OF EXCAVATORS, DESIGNERS, OR ANY PERSON PREPARING TO DISTURB THE EARTH'S SURFACE ANYWHERE IN ANY STATE

FOR STATE SPECIFIC DIRECT PHONE NUMBERS VISIT: WWW.CALL811.COM

REV	DATE	DRAWN BY	DESCRIPTION
1	7/1/25	MB	REVISED FOR TOWNSHIP SUBMISSION.

Mark Lescavage
2025.07.02 11:38:16-04'00'

Mark Lescavage
NEW JERSEY LICENSED PROFESSIONAL ENGINEER
LICENSE NUMBER: GE40346
COLLIERS ENGINEERING & DESIGN, INC.
N.J. C.O.A. #: 24GA27986500

PRELIMINARY AND FINAL MAJOR SITE PLAN & MAJOR SUBDIVISION PLAN

FOR

AMARANTH AT NORTH BRUNSWICK PHASES 3 & 4

BLOCK 148, LOT 1.01

TOWNSHIP OF NORTH BRUNSWICK
MIDDLESEX COUNTY
NEW JERSEY

Colliers Engineering & Design
HOLMDEL (Headquarters)
101 Crawfords Corner Road, Suite 3400
Holmdel, NJ 07733
Phone: 732.383.1950
COLLIERS ENGINEERING & DESIGN, INC. DOING BUSINESS AS MASER CONSULTING

SCALE:	DATE:	DRAWN BY:	CHECKED BY:
AS SHOWN	6/13/2025	RT	AJU

PROJECT NUMBER: 170019498 DRAWING NAME: C-DTLS-PHASE3

SHEET TITLE: CONSTRUCTION DETAILS

SHEET NUMBER: 10.02

NOTE: DO NOT SCALE DRAWINGS FOR CONSTRUCTION.

2017\170019498\Engineering\Site Plans\Phase 3\C-DTLS-PHASE3.dwg\C-10.02-STORM DETAILS By: FCRICHLOW

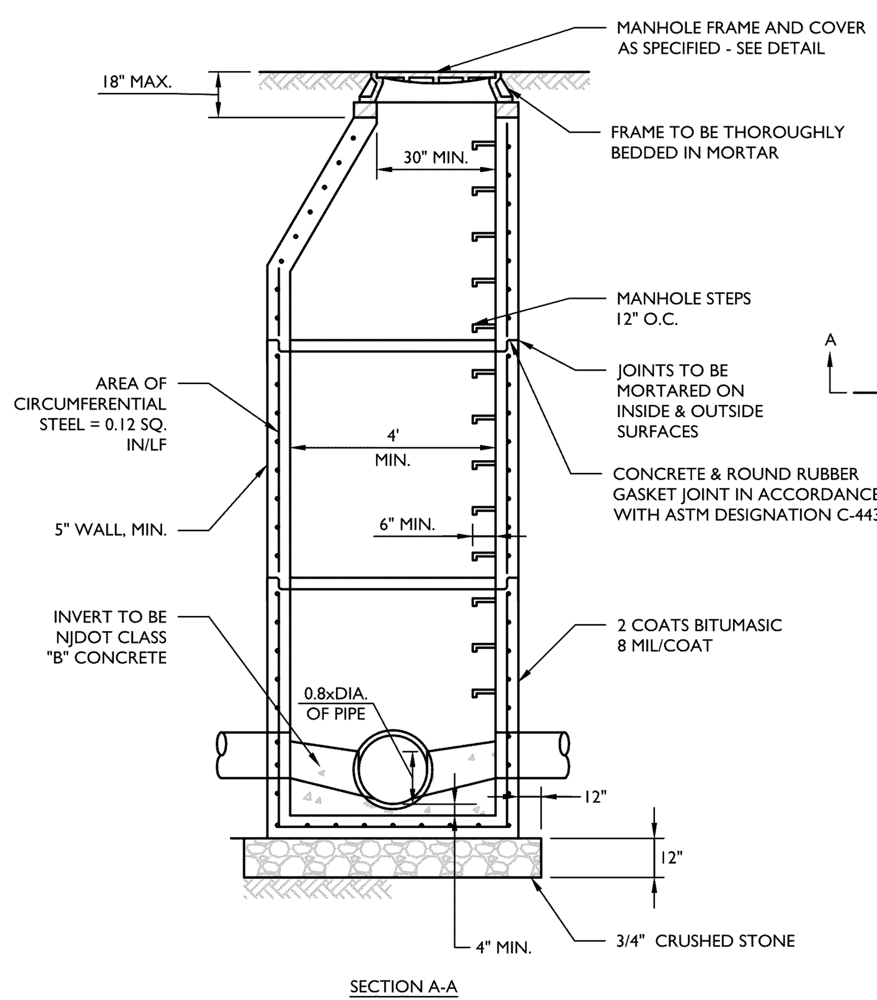

SECTION A-A

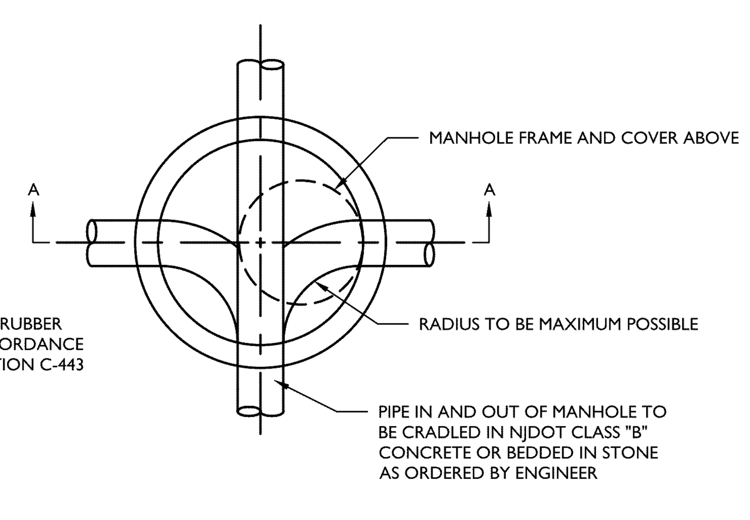

PLAN

NOTES:

1. PRECAST MANHOLE SECTIONS TO BE IN ACCORDANCE WITH ASTM C-478, NJDOT CLASS "B" CONCRETE.
2. FLEXIBLE RUBBER BOOT SHALL BE USED FOR CONNECTION OF PVC PIPE TO MANHOLE.
3. PRECAST CHANNELS SHALL NOT BE USED FOR BENDS GREATER THAN 45°. POURED CONCRETE LONG RADIUS CHANNELS SHALL BE CONSTRUCTED.

SANITARY PRECAST MANHOLE DETAIL

NOT TO SCALE MCNJ-UTIL-SSWR-1000 05/01/17

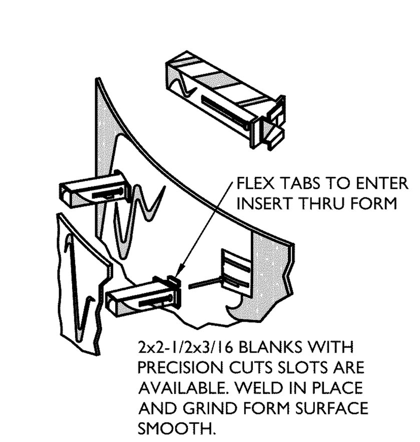

A POLYPROPYLENE INSERT FOR THE PURPOSE OF SECURING STEPS IN THE WALL OF A PRECAST CONCRETE MANHOLE OR OTHER CONCRETE STUCTURE.

PLACEMENT OF THE INSERT IS DONE AT THE TIME OF MANUFACTURE, THEREBY ASSURING THE WALL TO REMAIN WATERTIGHT, AND AT THE SAME TIME GUARANTEEING POSITIVE ALIGNMENT AND PROJECTION OF THE STEPS.

INSTALLATION OF EITHER THE ALUMINUM OR PLASTIC POLYPROPYLENE STEP INTO THE INSERT IS RAPID AND SIMPLE, AS THE STEP IS PRESSED OR DRIVEN INTO AN INTERFERENCE FIT IN THE INSERT CAVITY.

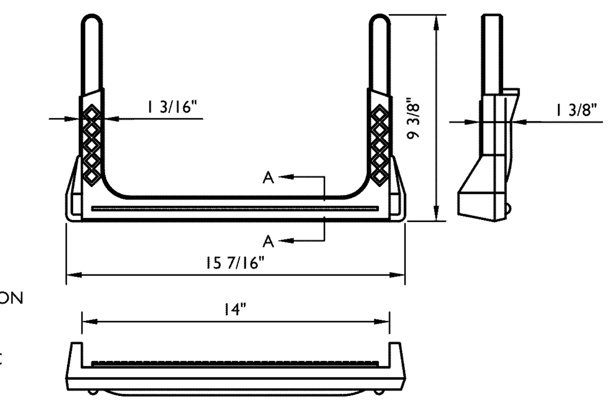

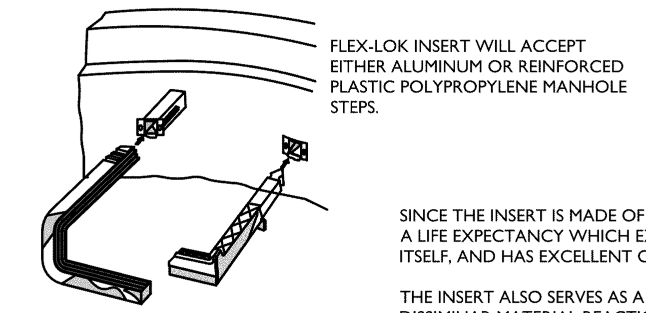

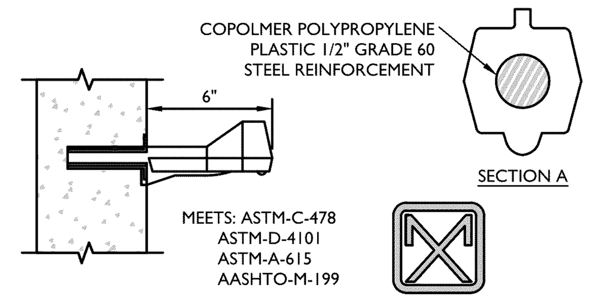

SINCE THE INSERT IS MADE OF POLYPROPYLENE, IT HAS A LIFE EXPECTANCY WHICH EXCEEDS THE CONCRETE ITSELF, AND HAS EXCELLENT CHEMICAL RESISTANCE.

THE INSERT ALSO SERVES AS A PROTECTIVE SHIELD AGAINST DISSIMILIAR MATERIAL REACTIONS, SUCH AS ELECTROLYSIS OF ALUMINUM AND CONCRETE.

THE INSERT MEETS REQUIREMENTS OF A.S.T.M. C-478 SECTION 12 AND PERFORMANCE TEST PROCEDURES OF A.S.T.M. C-497.

NOTES:

1. STEP INSERTS TO BE AS MANUFACTURED BY A-LOK PRODUCTS OR APPROVED EQUAL.

LADDER RUNG (COPOLYMER) DETAIL

NOT TO SCALE MCNJ-UTIL-SSWR-1502 02/01/19

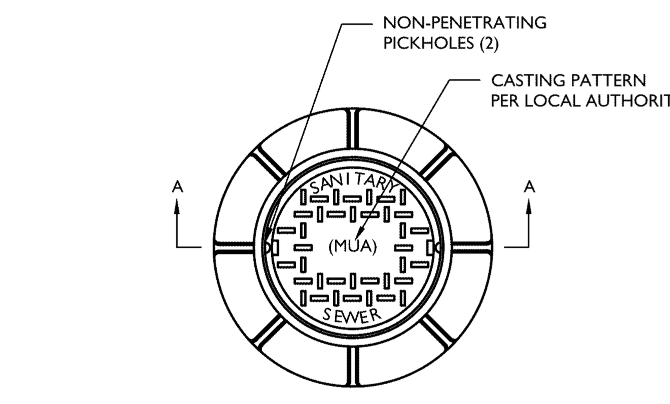

PLAN

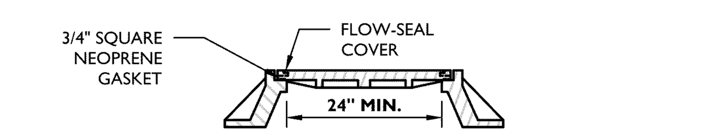

SECTION A-A

NOTES:

1. MANHOLE FRAME AND COVER SHALL BE CAMPBELL FOUNDRY PATTERN # **1202B** WITH FLOW-SEAL COVER OR APPROVED EQUAL OR AS OTHERWISE REQUIRED BY JURISDICTIONAL AUTHORITY.
2. MANHOLE FRAME AND COVER TO BE HEAVY DUTY, CONFORMING TO ASTM SPECIFICATION A-48 CLASS 30-B WITH SHOP COAT OF ASPHALTIC PITCH.
3. IN EASEMENTS AND REMOTE AREAS, COVER LOCKING DEVICES OF BRONZE AND KEY SHALL BE PROVIDED.
4. WATERTIGHT MANHOLE FRAME AND COVER SHALL BE PATTERN # **6547** AS MANUFACTURED BY CAMPBELL FOUNDRY COMPANY OR APPROVED EQUAL.

SANITARY MANHOLE FRAME AND COVER DETAIL

NOT TO SCALE MCNJ-UTIL-SSWR-1001 08/01/23

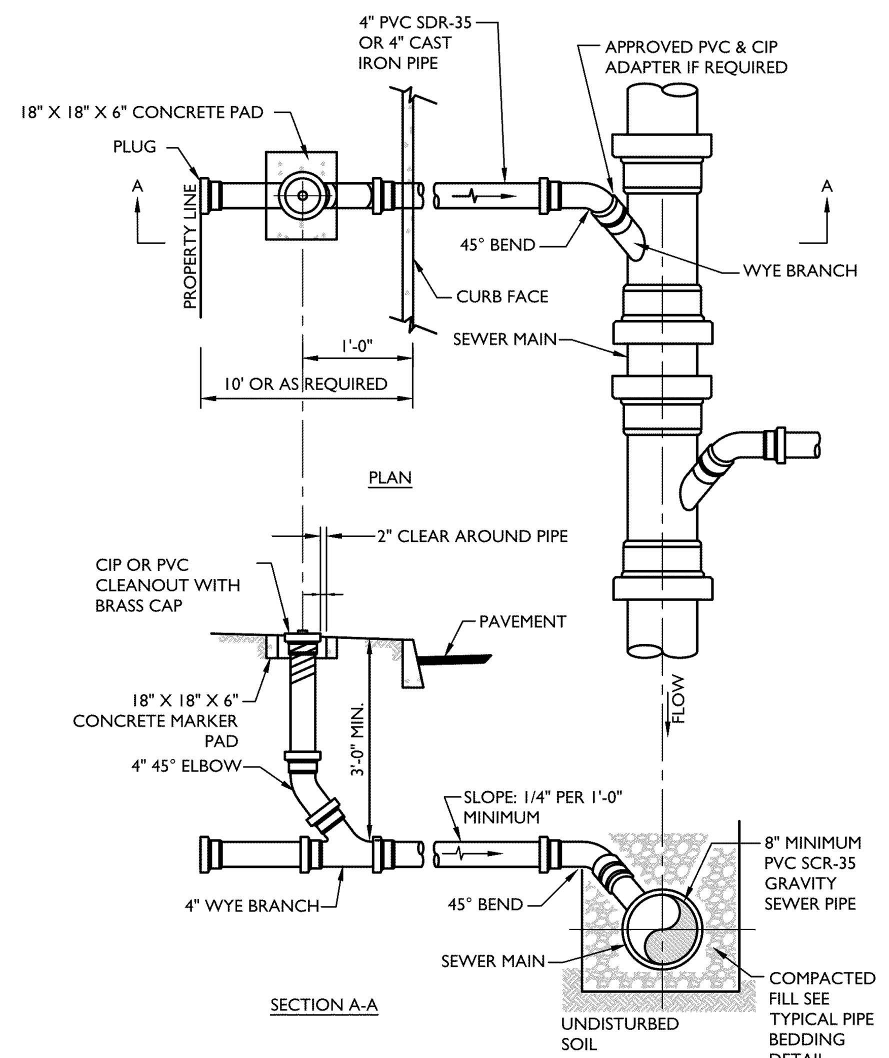

SANITARY SEWER LATERAL & CLEANOUT

N.T.S.

SANITARY SEWER LATERAL & CLEANOUT DETAIL

NOT TO SCALE MCNJ-UTIL-SSWR-1801 05/01/17

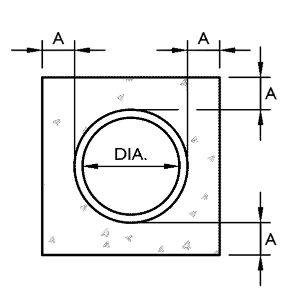

FULL ENCASEMENT

DIMENSIONS	
DIA.	A
6" OR LESS	5"
8"	6"
10"	6"
12"	6"
15"	6"
18"	6"
24"	6"
27"	6"
30"	7"
36"	8"
42"	9"
48"	10"
54"	12"

NOTES:

1. TO BE CONSTRUCTED WHERE SHOWN ON ON-SITE AND OFF-SITE UTILITY PLANS OR AS DIRECTED BY THE ENGINEER. IN GENERAL, THE VERTICAL SEPARATION AT A CROSSING OF SEWER AND WATER SHALL BE AT LEAST 18" WITH WATER ON TOP. WHERE THIS IS NOT POSSIBLE THE SEWER SHALL BE D.I.P. OR SHALL BE ENCASED IN CONCRETE FOR A DISTANCE OF AT LEAST 10'-0" ON EITHER SIDE OF THE CROSSING. ALSO, GRAVITY SANITARY SEWER SHALL BE ENCASED IN CONCRETE WHERE HORIZONTAL SEPARATION FROM WATER MAIN IS LESS THAN 10'-0" AND SEWER IS EITHER ABOVE OR LESS THAN 18" BELOW THE WATER MAIN VERTICALLY.
2. CONCRETE TO BE NJDOT CLASS "B".

CONCRETE ENCASEMENT DETAIL

NOT TO SCALE MCNJ-UTIL-SSWR-2300 05/01/17

SPECIFICATIONS

Notes:

1. 4" FPT inlet/outlet with 4" plain end adapters, single inlet and triple outlet.
2. Unit weight - w/ cast iron covers: 376 lbs. (For wet weight add 2,310 lbs.)
3. Maximum operating temperature: 150º F continuous
4. Capacities - Liquid: 277 gal.;
   Grease: 1,895 lbs. (260 gal.) @100GPM
   Grease: 1,196 lbs. (164 gal.) @200GPM
   Solids: 69 gal.
5. This unit does not require flow control for 100 GPM applications. Built-in flow control is provided for 200 GPM applications. For series installations, only install flow control on the first unit in the series if necessary.
6. For gravity drainage applications only.
7. Do not use for pressure applications.
8. Cover placement allows full access to tank for proper maintenance.
9. Vent not required unless per local code.
10. Engineered inlet and outlet diffusers with inspection ports are removable to inspect / clean piping.
11. Integral air relief / Anti-siphon / Sampling access.
12. Adjustable cover adapters provide up to 4" of additional height.
13. Designed for below-grade, above-grade, indoor or outdoor installations.
14. Safety Star®, access restrictor built into each cover adapter, prevents accidental entry to tanks (450 lb rating).

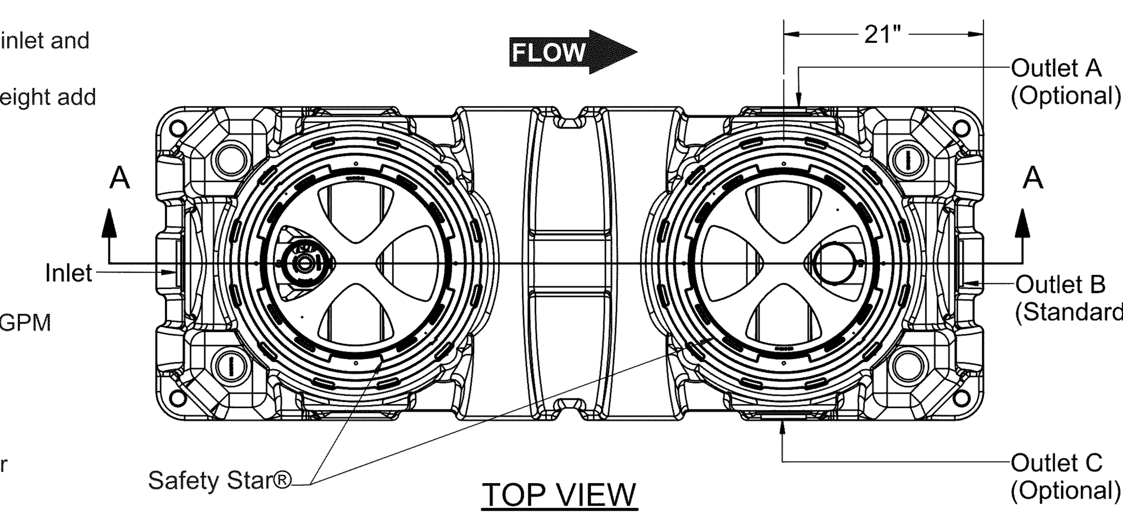

TOP VIEW
(COVERS REMOVED FOR CLARITY)

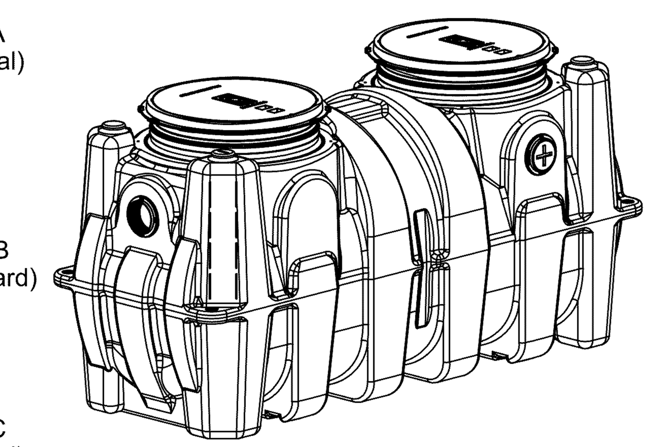

ISOMETRIC VIEW

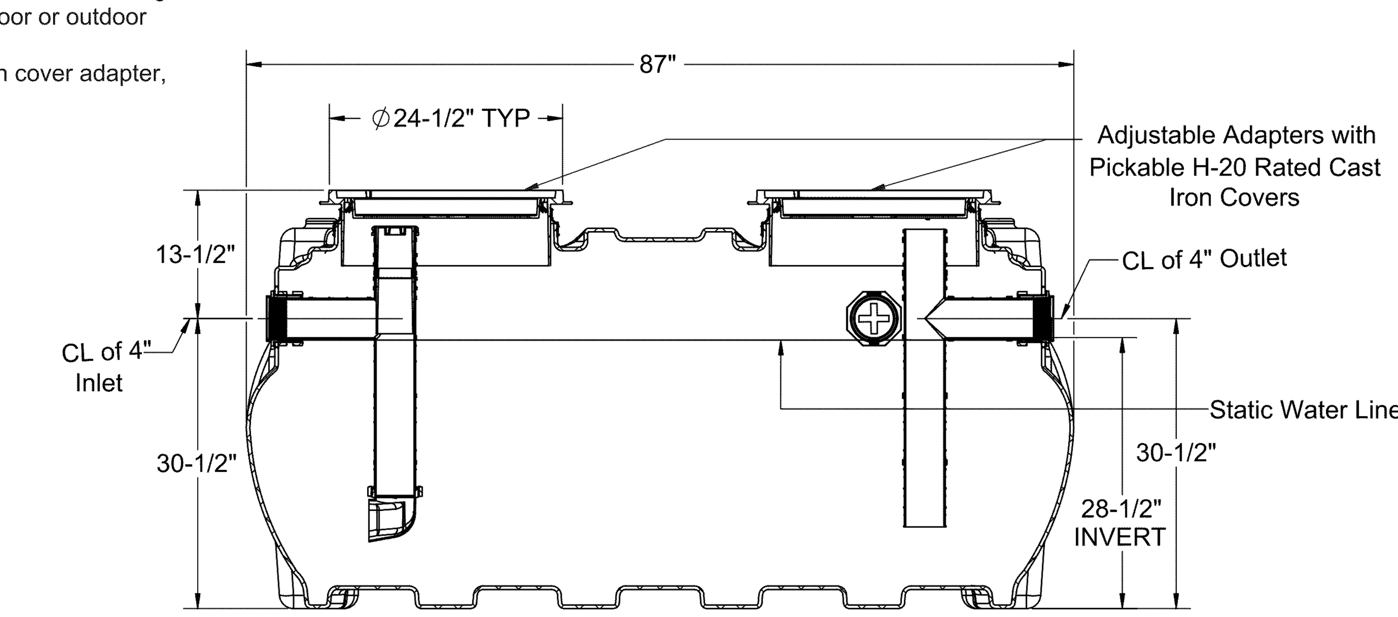

SECTION A-A

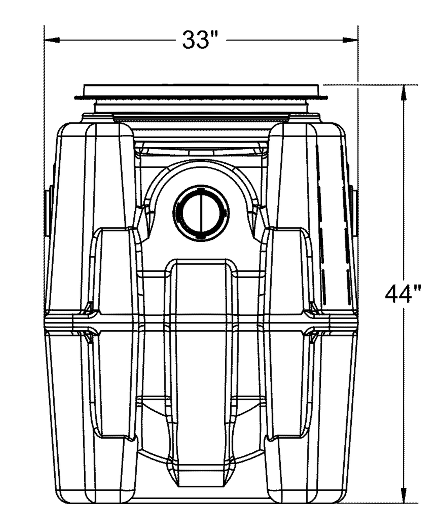

END VIEW

GB-250 GREASE INTERCEPTOR 100 GPM / 200 GPM, 4" INLET/OUTLET,
H-20 RATED CAST IRON COVERS

WAWA GREASE INTERCEPTOR DETAIL

NOT TO SCALE 6/27/25

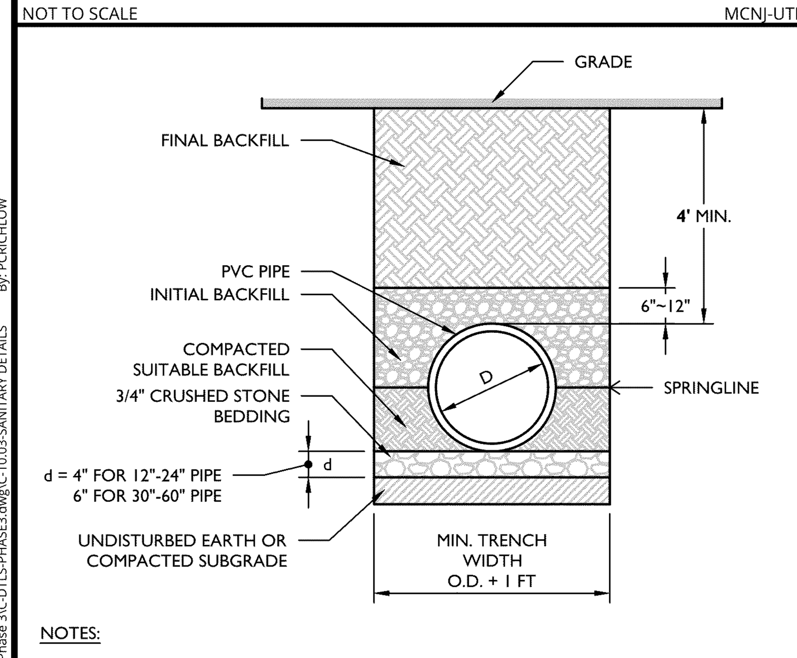

NOTES:

1. ALL PVC GRAVITY PIPE SYSTEMS MUST BE INSTALLED IN ACCORDANCE WITH ASTM D2321.
2. GRAVITY SANITARY PIPE IS TO BE PVC SDR 35 PER ASTM D3034 OR AS REQUIRED BY THE GOVERNING AUTHORITY.

PVC SANITARY PIPE BEDDING (GRAVITY) DETAIL

NOT TO SCALE MCNJ-UTIL-SSWR-2803 11/01/24

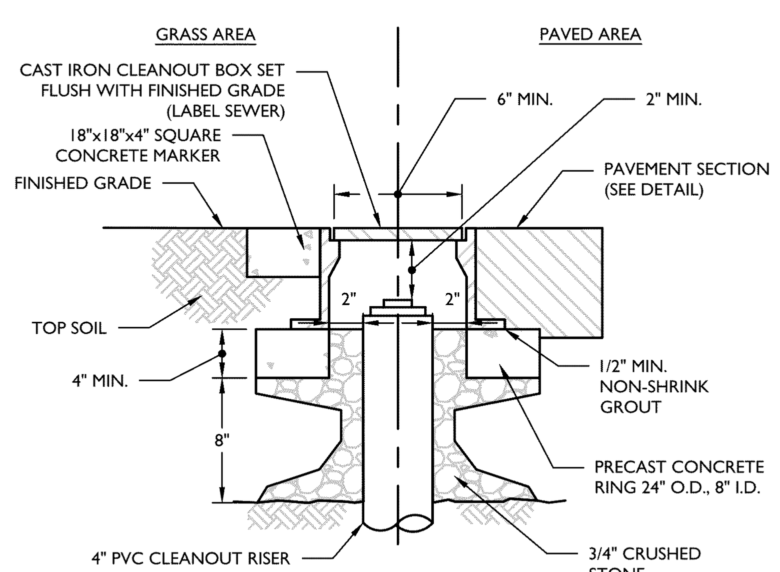

NOTES

1. ALL PVC CLEANOUTS TO HAVE CAST IRON FRAME AND COVER PROTECTION BOX. DESIGN FOR H20 LOADING.

CLEANOUT PROTECTION BOX DETAIL

NOT TO SCALE MCNJ-UTIL-SSWR-1601 05/01/17

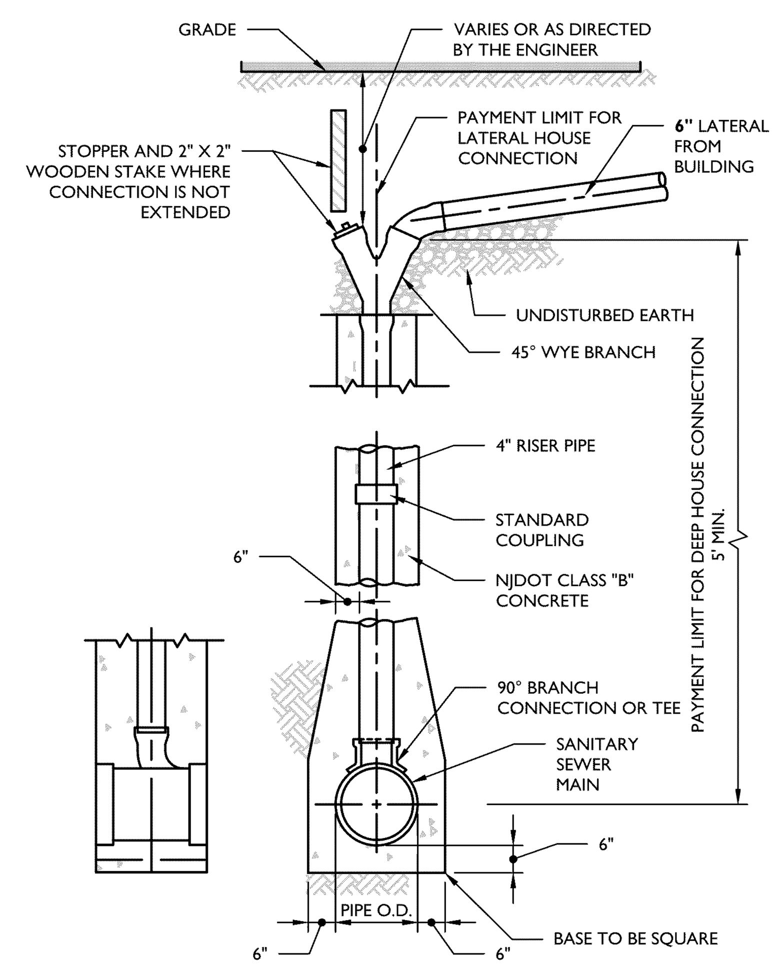

NOTES:

1. TO BE USED IF AND WHERE DIRECTED BY ENGINEER, WHEN SEWER DEPTH IS 10' OR MORE.
2. THIS IS A TYPICAL SCHEME FOR DEEP HOUSE CONNECTIONS. DEPENDING ON TYPE OF PIPE MATERIAL, A COMPARABLE SCHEME SHALL BE USED AND THE CONTRACTOR SHALL SUBMIT DETAILED SHOP DRAWINGS FOR APPROVAL.
3. SIX (6") INCH CONNECTION IS SIMILAR; MAINTAIN MINIMUM CONCRETE ENCASEMENT SIX (6") INCHES THICK. WHERE APPROVED BY ENGINEER, BENDS MAY BE USED IN LIEU OF THE WYE.

SANITARY DEEP HOUSE WYE CONNECTION DETAIL

NOT TO SCALE MCNJ-UTIL-SSWR-19001 05/01/17

Colliers Engineering & Design

www.colliersengineering.com

Copyright © 2025. Colliers Engineering & Design All Rights Reserved. This drawing and all the information contained herein is authorized for use only by the party for whom the services were contracted or to whom it is certified. This drawing may not be copied, reused, disclosed, distributed or relied upon for any other purpose without the express written consent of Colliers Engineering & Design.

Doing Business as MASER CONSULTING

811 Know what's below. Call before you dig.

PROTECT YOURSELF
ALL STATES REQUIRE NOTIFICATION OF EXCAVATORS, DESIGNERS, OR ANY PERSON PREPARING TO DISTURB THE EARTH'S SURFACE ANYWHERE IN ANY STATE

FOR STATE SPECIFIC DIRECT PHONE NUMBERS VISIT: WWW.CALL811.COM

REV	DATE	DRAWN BY	DESCRIPTION
1	7/1/25	MB	REVISED FOR TOWNSHIP SUBMISSION.

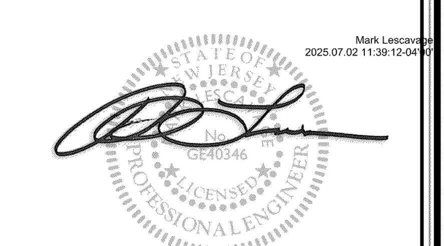

Mark Lescavage
NEW JERSEY LICENSED PROFESSIONAL ENGINEER
LICENSE NUMBER: GE40346
COLLIERS ENGINEERING & DESIGN, INC.
N.J. C.O.A. #: 24GA27986500

PRELIMINARY AND FINAL MAJOR SITE PLAN & MAJOR SUBDIVISION PLAN

FOR

AMARANTH AT NORTH BRUNSWICK PHASES 3 & 4

BLOCK 148, LOT 1.01

TOWNSHIP OF NORTH BRUNSWICK
MIDDLESEX COUNTY
NEW JERSEY

Colliers Engineering & Design
HOLMDEL (Headquarters)
101 Crawfords Corner Road, Suite 3400
Holmdel, NJ 07733
Phone: 732.383.1950
COLLIERS ENGINEERING & DESIGN, INC. DOING BUSINESS AS MASER CONSULTING

SCALE:	DATE:	DRAWN BY:	CHECKED BY:
AS SHOWN	6/13/2025	RT	AJU
PROJECT NUMBER: 17001949B	DRAWING NAME: C-DTLS-PHASE3		

SHEET TITLE: CONSTRUCTION DETAILS

SHEET NUMBER: 10.03

NOTE: DO NOT SCALE DRAWINGS FOR CONSTRUCTION.

2017\17001949B\Engineering\Site Plans\Phase 3\C-DTLS-PHASE3.dwg\C-10.03-SANITARY DETAILS By: PCRICHLOW

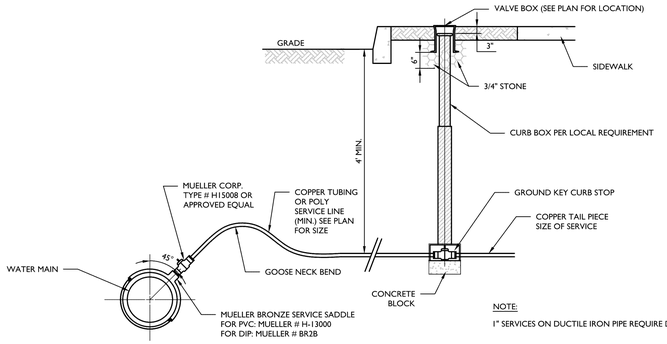

NOTE:

1" SERVICES ON DUCTILE IRON PIPE REQUIRE DIRECT TAP.

HOUSE WATER SERVICE CONNECTION DETAIL

DTL_SCALE | DTL_NUMBER | MODIFIED DTL_DATE

MINIMUM SIZE OF CONCRETE THRUST BLOCKS																	
d	A	B	C	d	A	B	C	d	A	B	C	A	B	C	d x e	A	B
6"	2' - 0"	8"	1' - 3"	6"	2' - 6"	8"	1' - 3"	6"	1' - 6"	6"	1' - 3"	1' - 6"	8"	1' - 3"	6" x 4"	1' - 6"	1' - 0"
8"	2' - 6"	8"	1' - 6"	8"	3' - 0"	8"	1' - 6"	8"	1' - 6"	8"	1' - 9"	1' - 6"	8"	1' - 9"	8" x 4"	2' - 0"	1' - 0"
10"	3' - 0"	10"	2' - 0"	10"	3' - 6"	10"	2' - 0"	10"	2' - 3"	10"	2' - 0"	1' - 6"	10"	2' - 0"	10" x 6"	2' - 4"	1' - 3"
12"	3' - 6"	10"	2' - 6"	12"	3' - 9"	10"	2' - 9"	12"	2' - 6"	10"	2' - 6"	1' - 6"	10"	2' - 6"	10" x 8"	2' - 6"	1' - 6"

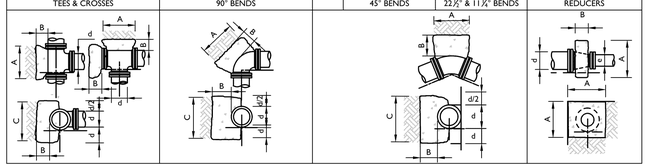

NOTES:

1. ALL HORIZONTAL BENDS SHALL HAVE CONCRETE THRUST BLOCKS WITH MINIMUM BEARING AREAS AGAINST UNDISTURBED SOIL AND NO JOINT SHALL BE COVERED WITH CONCRETE.
2. BEARING AREAS ARE BASED UPON UNDISTURBED SOIL WITH A MINIMUM BEARING CAPACITY OF 0.5 TONS PER SQUARE FOOT. FOR A LESSER SOIL BEARING CAPACITY THESE AREAS SHALL BE INCREASED ACCORDINGLY.
3. THRUST BLOCKS SHALL BE POURED DIRECTLY AGAINST TRENCH WALLS AND SHALL BE NJDOT CLASS "B" CONCRETE AT 4,500 PSI.
4. DETAILS FOR SUPPORTS AND BRACING FOR VERTICAL BENDS FOR 12" DIAMETER OR LARGER SHALL BE APPROVED BY THE AUTHORITY PRIOR TO CONSTRUCTION.

THRUST BLOCKS DETAIL

NOT TO SCALE | MCNJ-UTIL-WATR-14001 | 05/01/17

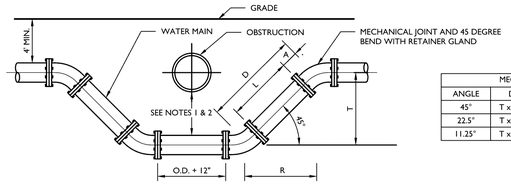

MECHANICAL JOINTS			
ANGLE	D =	R =	L =
45°	T x 1.414	T x 1.000	D-2A
22.5°	T x 2.613	T x 2.414	D-2A
11.25°	T x 5.126	T x 5.027	D-2A

NOTES:

1. WATER MAIN MAY CROSS ABOVE OBSTRUCTION IF 4' MINIMUM COVER IS MAINTAINED ABOVE THE WATER MAIN AND FINISH GRADE.
2. MINIMUM VERTICAL SEPARATION BETWEEN SANITARY OR STORM SEWER TO WATER MAIN SHALL BE 18" IF THE HORIZONTAL SEPARATION IS LESS THAN 10', BETWEEN WATER MAIN AND OTHER UTILITIES, THE MINIMUM VERTICAL SEPARATION SHALL BE 12".
3. WATER MAIN SHALL BE 8" AND PVC C-900 AS SPECIFIED ON THE PLAN, WITH MECHANICAL JOINT OR PUSH-ON AND ALL FITTINGS BE CAST IRON MECHANICALLY JOINT.
4. OFFSETS MAY BE SUBSTITUTED FOR A "T" OF UP TO 24" IF APPROVED BY THE ENGINEER.
5. CONCRETE THRUST BLOCKS SHALL BE PROVIDED AT ALL BENDS OR OTHER POINTS OF PIPE DIRECTION CHANGE.
6. TIE RODS SHALL BE UTILIZED TO RESTRAIN PIPE JOINTS IF THRUST BLOCK IS NOT USED. DETAILS OF THE TIE ROD ASSEMBLY SHALL BE SUBMITTED TO THE ENGINEER FOR APPROVAL. TIE RODS SHALL BE SUFFICIENT TO RESTRAIN THE THRUST DEVELOPED AT 100 PSI WORKING PRESSURE. MEGALUG RESTRAINT ALSO ACCEPTABLE IN PLACE OF TIE RODS.

WATER CROSSING UNDER UTILITY DETAIL

NOT TO SCALE | MCNJ-UTIL-WATR-1300 | MOD: 02/03/25 | 05/01/17

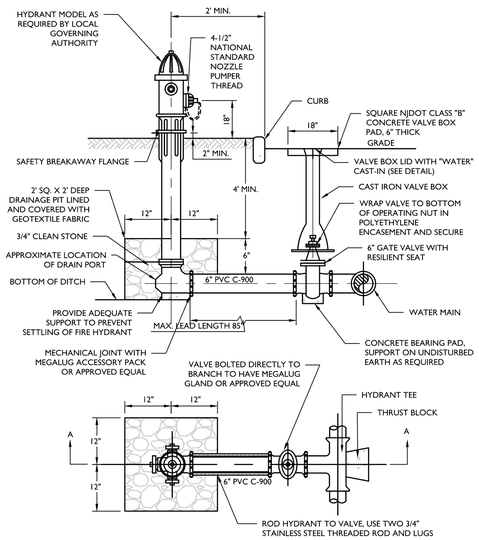

NOTES:

1. HYDRANT SHALL BE **T.W.W. STANDARD U.S. PIPE METROPOLITAN 250 DRY-BARREL** TRAFFIC MODEL DESIGN WITH THE FOLLOWING SPECIFICATION.
   - A. SAFETY COUPLED STANDPIPE.
   - B. 6" MECHANICAL JOINT INLET CONNECTION
   - C. TWO 2-1/2" NATIONAL STANDARD THREAD HOSE NOZZLES.
   - D. ONE 4-1/2" NATIONAL STANDARD THREAD STEAMER NOZZLE, FACING THE ROAD.
   - E. HYDRANT OPERATORS AND HYDRANT NOZZLE CAP NUTS SHALL BE IN ACCORDANCE WITH AWWA/ANSI STANDARD C502.
   - F. HYDRANT HOSE CAPS SHALL BE ATTACHED BY MEANS OF CHAINS.
   - G. HYDRANT BARRELS SHALL BE PAINTED - **RED**, BONNETS - **YELLOW**, AND NOZZLE CAPS - **BLACK** TO INDICATE THE AVAILABLE FIRE FLOW OR AS IN ACCORDANCE WITH THE LOCAL REQUIREMENTS.
   - H. HYDRANTS SHALL OPEN COUNTER CLOCKWISE.
2. STANDPIPE (BREAK-AWAY) COUPLING SHALL NOT EXCEED A MAXIMUM OF 5 INCHES FROM THE TOP OF THE CURB TO THE BOTTOM OF COUPLING.
3. THE DRAIN VALVE SHALL BE CLEAR OF ANY OBSTRUCTIONS, AND 3/4" CLEAN GRAVEL BE PLACED FROM THE BOTTOM OF THE HYDRANT TO A POINT 6" ABOVE THE HYDRANT LATERAL PIPE.
4. THRUST BLOCKS SHALL BE MADE OF NJDOT CLASS "B" CONCRETE, PROVIDED BEHIND THE HYDRANT SHOE.
5. BACKFILL MATERIAL SHALL BE IN ACCORDANCE WITH THE LOCAL JURISDICTION.
6. GATE VALVE SHALL BE **T.W.W. 6" U.S. PIPE METROSEAL. 250 R/S** (RESILIENT SEALED) MECHANICAL JOINT END (RIGHT HAND).
7. WATER LATERAL SHALL BE 6" PVC C-900.
8. TIE ROD SHALL BE 3/4" DIAMETER TIE ROD WITH EYE BOLTS - TWO REQUIRED (SIDE VIEW SHOWN), RESTRAIN ALL JOINTS ON HYDRANT TEE, VALVE, AND HYDRANT LEAD.
9. HYDRANT TEE SHALL BE U.S. PIPE CATALOG #LI-592 TRIM-TYTE DUCTILE IRON, MECHANICAL JOINT OR AN T.W.W. APPROVED SUBSTITUTE.

FIRE HYDRANT (VALVE IN PAVEMENT) DETAIL

NOT TO SCALE | MCNJ-UTIL-WATR-1001 | MOD: 02/03/25 | 05/01/17

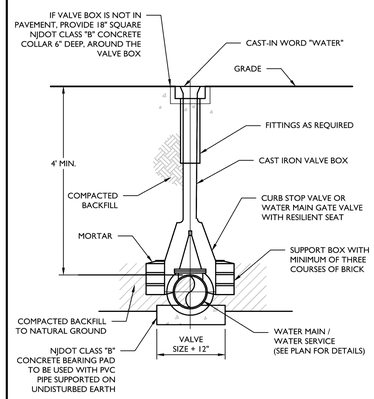

NOTES:

1. VALVE BOX SHOULD HAVE EXTENSION IF WATER MAIN OR SERVICE IS PLACED DEEPER THAN 5 FEET.
2. CURB STOP VALVE BOX SHALL BE MUELLER EXTENSION TYPE WITH ARCH PATTERN BASE, OR APPROVED EQUAL.
3. WATER MAIN VALVE BOX SHALL BE SCREW TYPE ADJUSTABLE MODE. **FIGURE # 4905-22 AS MANUFACTURED BY BINGHAM & TAYLOR OR APPROVED EQUAL.**

WATER VALVE BOX DETAIL

NOT TO SCALE | MCNJ-UTIL-WATR-1600 | 05/01/17

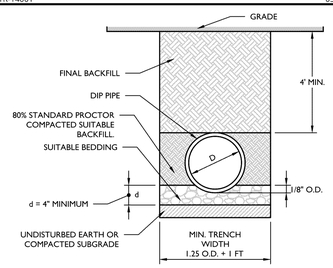

NOTES:

1. ALL PIPE SYSTEMS AND BACKFILL SHALL BE INSTALLED IN ACCORDANCE WITH ANSI/AWWA C600.
2. WATER MAIN PIPE SHALL BE CEMENT LINED DUCTILE IRON PIPE (DIP) PRESSURE **CLASS 150**, THICKNESS **CLASS 52** WITH ASPHALTIC EPOXY TYPE COATING.
3. SUITABLE BACKFILL MATERIAL SHALL BE SAND, GRAVEL, OR 3/4" CRUSHED STONE.

DIP WATER PIPE BEDDING (TYPE 4) DETAIL

NOT TO SCALE | MCNJ-UTIL-WATR-1900 | 05/01/17

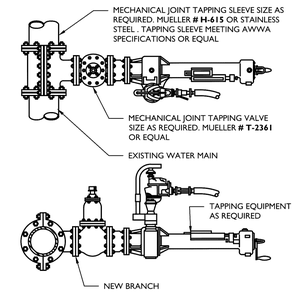

NOTES:

1. WET TAP VALVE CAN BE INSTALLED IN EITHER VERTICAL OR HORIZONTAL POSITION.
2. CONTRACTOR SHALL VERIFY DEPTH OF BURY, MATERIAL, DIAMETER (O.D.) AND OPERATING PRESSURE OF EXISTING WATER MAIN PRIOR TO ORDERING OF WET TAP UNIT.

WET TAP DETAIL

NOT TO SCALE | MCNJ-UTIL-WATR-1200 | 03/01/20

Colliers Engineering & Design

www.colliersengineering.com

Copyright © 2025. Colliers Engineering & Design All Rights Reserved. This drawing and all the information contained herein is authorized for use only by the party for whom the services were contracted or to whom it is certified. This drawing may not be copied, reused, disclosed, distributed or relied upon for any other purpose without the express written consent of Colliers Engineering & Design.

Doing Business as MASER CONSULTING

PROTECT YOURSELF
ALL STATES REQUIRE NOTIFICATION OF EXCAVATORS, DESIGNERS, OR ANY PERSON PREPARING TO DISTURB THE EARTH'S SURFACE ANYWHERE IN ANY STATE

811 Know what's below. Call before you dig.

FOR STATE SPECIFIC DIRECT PHONE NUMBERS VISIT: WWW.CALL811.COM

REV	DATE	DRAWN BY	DESCRIPTION
1	7/1/25	MB	REVISED FOR TOWNSHIP SUBMISSION.

Mark Lescavage
2025.07.02 11:39:52-04'00'

Mark Lescavage
NEW JERSEY LICENSED PROFESSIONAL ENGINEER
LICENSE NUMBER: GE40346
COLLIERS ENGINEERING & DESIGN, INC.
N.J. C.O.A. #: 24GA27986500

PRELIMINARY AND FINAL MAJOR SITE PLAN & MAJOR SUBDIVISION PLAN

FOR

AMARANTH AT NORTH BRUNSWICK PHASES 3 & 4

BLOCK 148, LOT 1.01

TOWNSHIP OF NORTH BRUNSWICK
MIDDLESEX COUNTY
NEW JERSEY

Colliers Engineering & Design
HOLMDEL (Headquarters)
101 Crawfords Corner Road, Suite 3400
Holmdel, NJ 07733
Phone: 732.383.1950
COLLIERS ENGINEERING & DESIGN, INC. DOING BUSINESS AS MASER CONSULTING

SCALE:	DATE:	DRAWN BY:	CHECKED BY:
AS SHOWN	6/13/2025	RT	AJU

PROJECT NUMBER: 17001949B
DRAWING NAME: C-DTLS-PHASE3

SHEET TITLE: CONSTRUCTION DETAILS

SHEET NUMBER: 10.04

2017\17001949B\Engineering\Site Plans\Phase 3\C-DTLS-PHASE3.dwg\C-10.04-WATER DETAILS By: PCRICHLOW

NOTE: DO NOT SCALE DRAWINGS FOR CONSTRUCTION.

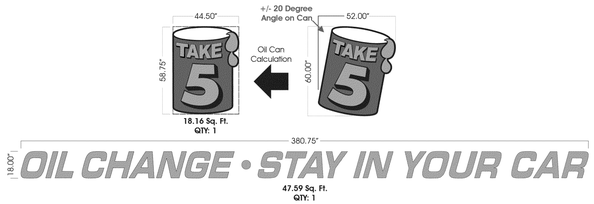

FRONT BUILDING SIGN (65.75 SF)

SIDE BUILDING SIGN (44.1 SF)

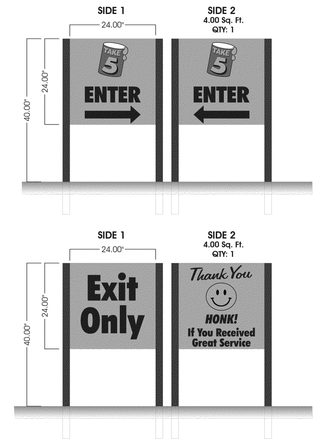

DIRECTIONAL SIGNS (4 SF)

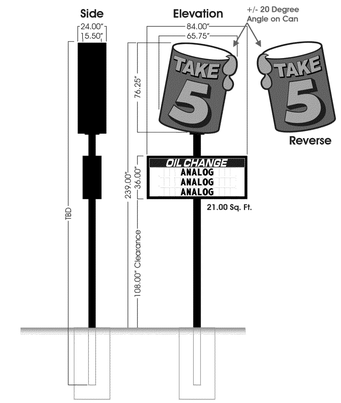

PYLON SIGN (49.78 SF)

INFORMATIVE/INSTRUCTIONAL MESSAGE (NOT COUNTED TOWARD ALLOWANCE)

REAR BUILDING SIGN (27.69 SF)

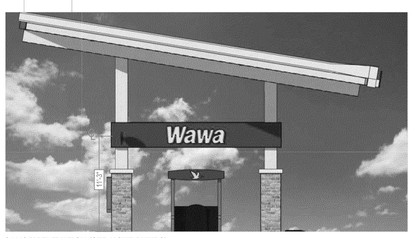

CANOPY ELEVATION (STRAIGHT PUMPS)

not to scale

2023 UNIVERSAL SIGN FAMILY

CANOPY SIGN (27.8 SF)

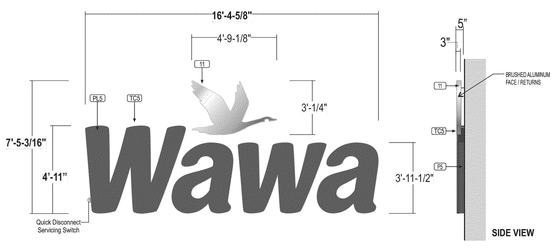

FRONT BUILDING SIGN (92.54 SF)

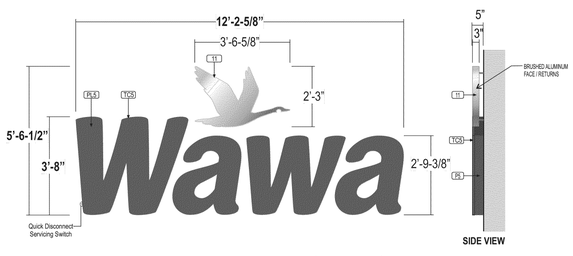

REAR BUILDING SIGN (51.46 SF)

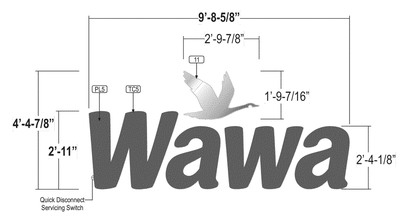

SIDE BUILDING SIGN (32.54 SF)

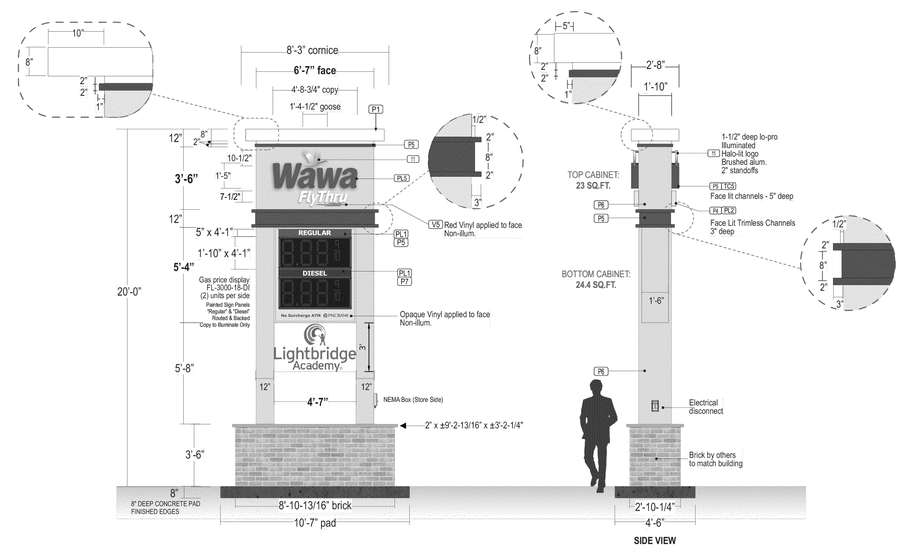

PYLON SIGN (61.45 SF)

Colliers Engineering & Design

www.colliersengineering.com

Copyright © 2025. Colliers Engineering & Design All Rights Reserved. This drawing and all the information contained herein is authorized for use only by the party for whom the services were contracted or to whom it is certified. This drawing may not be copied, reused, disclosed, distributed or relied upon for any other purpose without the express written consent of Colliers Engineering & Design.

Doing Business as MASER CONSULTING

811 Know what's below. Call before you dig.

PROTECT YOURSELF
ALL STATES REQUIRE NOTIFICATION OF EXCAVATORS, DESIGNERS, OR ANY PERSON PREPARING TO DISTURB THE EARTH'S SURFACE ANYWHERE IN ANY STATE

FOR STATE SPECIFIC DIRECT PHONE NUMBERS
VISIT: WWW.CALL811.COM

REV	DATE	DRAWN BY	DESCRIPTION
1	7/1/25	MB	REVISED FOR TOWNSHIP SUBMISSION.

Mark Lescavage
2025.07.02 11:40:43-04'00'

Mark Lescavage
NEW JERSEY LICENSED PROFESSIONAL ENGINEER
LICENSE NUMBER: GE40346
COLLIERS ENGINEERING & DESIGN, INC.
N.J. C.O.A. #: 24GA27986500

PRELIMINARY AND FINAL MAJOR SITE PLAN & MAJOR SUBDIVISION PLAN
FOR
AMARANTH AT NORTH BRUNSWICK PHASES 3 & 4

BLOCK 148, LOT 1.01

TOWNSHIP OF NORTH BRUNSWICK
MIDDLESEX COUNTY
NEW JERSEY

Colliers Engineering & Design
HOLMDEL (Headquarters)
101 Crawfords Corner Road, Suite 3400
Holmdel, NJ 07733
Phone: 732.383.1950
COLLIERS ENGINEERING & DESIGN, INC. DOING BUSINESS AS MASER CONSULTING

SCALE:	DATE:	DRAWN BY:	CHECKED BY:
AS SHOWN	6/13/2025	RT	AJU

PROJECT NUMBER: 17001949B
DRAWING NAME: C-DTLS-PHASE3

SHEET TITLE:
CONSTRUCTION DETAILS

SHEET NUMBER:
10.05

2017\17001949B\Engineering\Site Plans\Phase 3\C-DTLS-PHASE3.dwg\C-10.05-TENANT DETAILS By: PCRICHLOW

NOTE: DO NOT SCALE DRAWINGS FOR CONSTRUCTION.

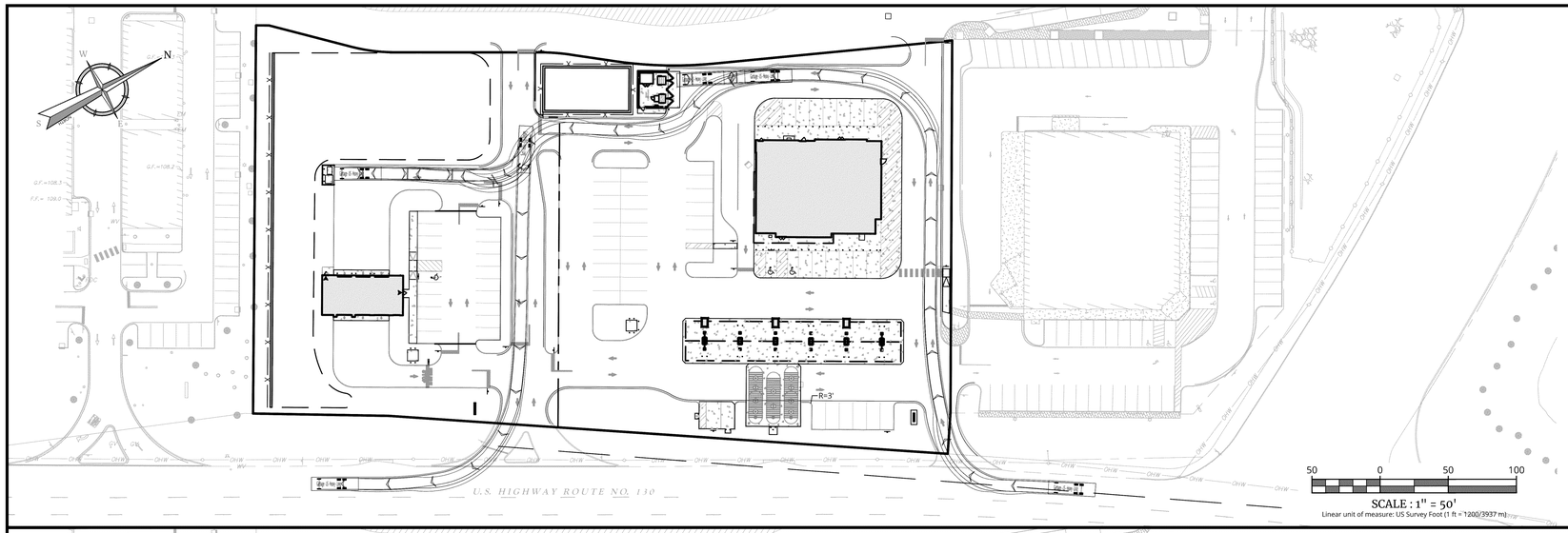

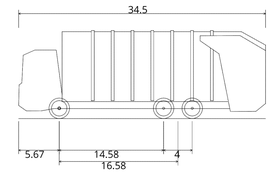

Garbage - US - Heavy - Long

Overall Length	34.500ft
Overall Width	9.830ft
Overall Body Height	12.301ft
Min Body Ground Clearance	0.991ft
Track Width	8.170ft
Lock-to-lock time	6.00s
Curb to Curb Turning Radius	33.200ft

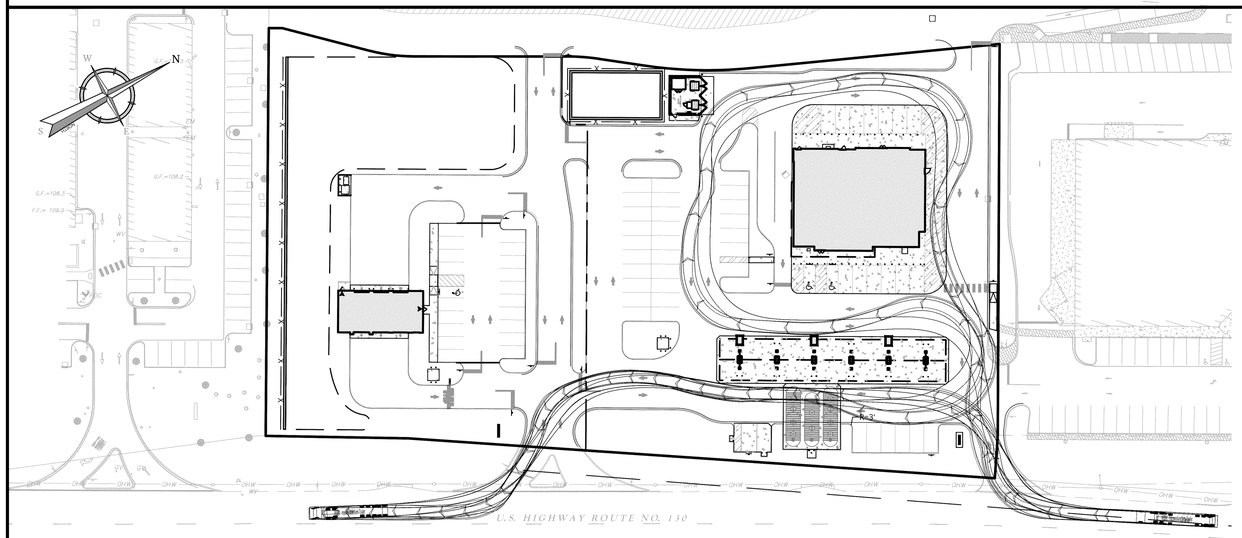

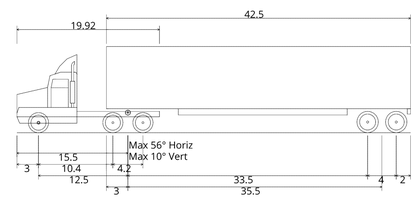

WB-50 - Intermediate Semi-Trailer

Overall Length	55.000ft
Overall Width	8.500ft
Overall Body Height	12.052ft
Min Body Ground Clearance	1.334ft
Max Track Width	8.500ft
Lock-to-lock time	6.00s
Max Steering Angle (Virtual)	17.90°

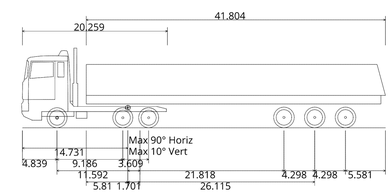

Oil Tanker

Overall Length	50.725ft
Overall Width	8.202ft
Overall Body Height	11.141ft
Min Body Ground Clearance	1.049ft
Max Track Width	8.202ft
Lock-to-lock time	4.00s
Curb to Curb Turning Radius	21.325ft

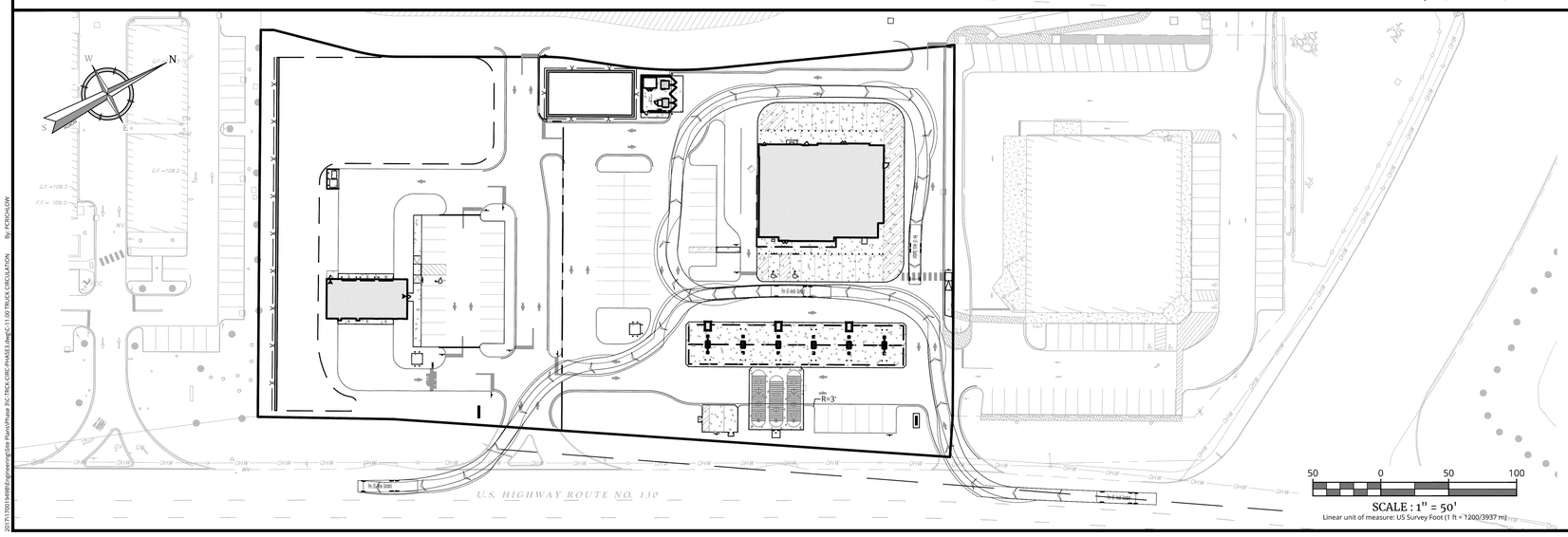

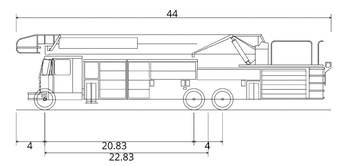

Fire - US - Aerial - Standard

Overall Length	44.000ft
Overall Width	8.500ft
Overall Body Height	10.519ft
Min Body Ground Clearance	0.950ft
Track Width	8.500ft
Lock-to-lock time	6.00s
Curb to Curb Turning Radius	38.870ft

Colliers Engineering & Design

www.colliersengineering.com

Copyright © 2025. Colliers Engineering & Design All Rights Reserved. This drawing and all the information contained herein is authorized for use only by the party for whom the services were contracted or to whom it is certified. This drawing may not be copied, reused, disclosed, distributed or relied upon for any other purpose without the express written consent of Colliers Engineering & Design.

Doing Business as MASER CONSULTING

PROTECT YOURSELF
ALL STATES REQUIRE NOTIFICATION OF EXCAVATORS, DESIGNERS, OR ANY PERSON PREPARING TO DISTURB THE EARTH'S SURFACE ANYWHERE IN ANY STATE

FOR STATE SPECIFIC DIRECT PHONE NUMBERS
VISIT: WWW.CALL811.COM

REV	DATE	DRAWN BY	DESCRIPTION
1	7/1/25	MB	REVISED FOR TOWNSHIP SUBMISSION.

Mark Lescavage
2025.07.02 11:41:44-04'00'

Mark Lescavage
NEW JERSEY LICENSED PROFESSIONAL ENGINEER
LICENSE NUMBER: GE40346
COLLIERS ENGINEERING & DESIGN, INC.
N.J. C.O.A. #: 24GA27986500

PRELIMINARY AND FINAL MAJOR SITE PLAN & MAJOR SUBDIVISION PLAN

FOR

AMARANTH AT NORTH BRUNSWICK PHASES 3 & 4

BLOCK 148, LOT 1.01

TOWNSHIP OF NORTH BRUNSWICK
MIDDLESEX COUNTY
NEW JERSEY

Colliers Engineering & Design
HOLMDEL (Headquarters)
101 Crawfords Corner Road, Suite 3400
Holmdel, NJ 07733
Phone: 732.383.1950
COLLIERS ENGINEERING & DESIGN, INC. DOING BUSINESS AS MASER CONSULTING

SCALE:	DATE:	DRAWN BY:	CHECKED BY:
AS SHOWN	6/13/2025	RT	AJU

PROJECT NUMBER:	DRAWING NAME:
17001949B	C-TRCK-CIRC-PHASE3

SHEET TITLE:

TRUCK CIRCULATION PLAN

SHEET NUMBER:

11.00

NOTE: DO NOT SCALE DRAWINGS FOR CONSTRUCTION.

2017\17001949B\Engineering\Site Plans\Phase 3\C-TRCK-CIRC-PHASE3.dwg\C-11.00 TRUCK CIRCULATION By: PCRICHLOW